JASPER ELECTRONICS



BUILD AMERICA BUY AMERICA STANDARD

POPULAR OPTIONS

- Additional Labeling
- Custom Silkscreening
- Bar Codes



CONTACT

1580 No. Kellogg Dr.
Anaheim, California, 92807

(714) 917-0749

www.jasperelectronics.com
sales@jasperelectronics.com

Model TC206LS (24V)

AC Input, 120W Single DC Output



TC206LS FRONT VIEW



TC206LS BACK VIEW

GENERAL OVERVIEW

This document outlines the general specifications for Jasper Electronics (JE) model TC206LS component power supply module, generally compliant to the State of California Department of Transportation (Caltrans) Transportation Electrical Equipment Specification (TEES) March 12, 2009, and designated by Caltrans as Model 206LS.

TC206LS is a chassis mounted, open frame, single output switching power supply capable delivering up to 120 Watts DC, and intended specifically for use in Caltrans TEES 332L, 334L and 336L cabinets fitted with PDA2-LS Power Distribution Assemblies. These are designed for non-redundant "cold pluggable" installation in the end product. AC input, PE, and DC power output connections are through a 6-circuit connector at the rear of the supply. This unit is convection cooled, with an extended operating temperature range. It is not interchangeable with earlier Caltrans Model 206 linear or current Model 206L switching type power supplies without requiring cabinet modifications.

TC206LS is similar to the original 206L but re-configured into a smaller overall size for use in compact Power Distribution Assemblies designated PDA2-LS. The compact PDA creates space for traffic cabinet vendors to install additional optional component modules. Changes affecting the form, fit, function or other features outlined in this document shall not be permitted without prior notification and approval of the user. Specific design requirements are detailed in the TEES document.

TECHNICAL SPECIFICATIONS

INPUT	
Voltage/ Current Label Rating	AC 90-250V, 47-63Hz, 1.6A max, Single Phase;
TEES Minimum	AC 90-132V, 57-63Hz, 1.6A max
Power Factor	>0.98 line PFC typical at AC 115V, full load
Fusing	AC 3.15A, 250V delayed (slow-blow) action 5x20mm AG cartridge type external line fuse provided, operator accessible. Fuse IEC 60127 certified.
Inrush Current	Soft start (~25oC cold start) 30Apk @ AC 115V
Efficiency	At AC 115V: >75% @ 1.0A; >84% @ 2.5A; >86% @ 5.0A
OUTPUT	
Voltage/ Current (V/A)	V1
Model TC206LS	24.0V, 5.0A
	Total loading not to exceed 120 Watts at 74°C
Output Voltage Setpoint	Factory preset within ±2.0% of nominal voltage
Line Regulation	<±2.0% at the output connection over the full AC input range and 0 – 100% output loading
Minimum Loading	None required
Output Turn-on Delay	<200mSec from AC turn-on
Over/ Under Shoot	None at turn-on or turn-off
Stability	<±0.2% output drift after 20 minute warm-up
Temperature Coefficient	<±0.02%/°C,0°-50°C,after 20 minute warm-up
Dynamic Response	<±5.0% deviation with a 50% load change at a slew rate of 1A/µsec. Output recovers to within 5% in less than 300µsec
Ripple and Noise (PARD)	2.0V max peak-to-peak / 500mV RMS nominal at the output terminal with a 20 MHz bandwidth limit. May be measured with a 0.1µF ceramic capacitor in parallel with a 22µF tantalum capacitor connected between the measured output and its return
Over Voltage Protection (OVP)	Non-crowbar type from 27.6V to 32.4V
Over Current/ Short Circuit Protection	Protected against overload from 6A to 8A and short-circuit faults. Automatic recovery when overload removed
Over Temperature Protection	Internal temperature sensing. Causes output to shut down. Automatic recovery
Output Transient Protection	Minimum 1400W voltage transient suppressor provided
Output Fusing	AC 8.0A, 250V delayed (slow-blow) action 5x20 AG cartridge type external fuse provided in the (+) output, operator accessible. Fuse IEC 60127 certified
SIGNALS, INDICATORS AND CONTROLS	
AC Power Indicator	Front panel mounted, single-color LED. Red indicates AC power ON. Off indicates an input fault
DC Power Indicator	Front panel mounted, single-color LED. Green indicates DC power ON. Off indicates an output fault
Output Test Points	Two "banana jack" type test sockets provided on the front panel, color coded red and black. Allows operator to verify output voltage
MECHANICAL	
(Refer to JE Outline Configuration Dwg, P/N 03751-000.)	
Mounting Orientation	Designed for vertical insertion into a TEES speci-fied Power Distribution Assembly PDA #2LS
Weight	1.25Kg [2.75lbs]
Retaining Fastener	A single operator accessible 10-32 UNC captive panel fastener is provided on the front panel. PEM PF11-032-1
OPERATING ENVIRONMENT	
Operating Temperature	-34.6° – +165.2°F (-37.0° – +74.0°C) ambient at full load
Cooling	Convection only

**Specifications subject to change without notice.*

Jasper Electronics
1580 No. Kellogg Dr., Anaheim, California, 92807 USA
(714) 917-0749 • www.jasperelectronics.com • sales@jasperelectronics.com

Relative Humidity	Up to 95% RH, non-condensing
Operational Vibration	0.75G peak, 5 – 500Hz along three orthogonal axis
Storage Temperature	-40º to +185ºF (-40º to +85ºC)
Altitude	Operating to 10,000 ft. Storage to 30,000 ft
MTBF	Designed for 150,000 hrs at 25ºC
INTERCONNECT	
Input/ Output Connector	6-circuit (2x3) panel-to-panel plug with 0.250"[6.35mm]x0.055"[1.40mm] blade type contact terminals, rated 15A/pin. General purpose black phenolic insulator material. Secured in the unit rear panel. Cinch model P-2406H-SB. Mates with Cinch model S-2406-SB or equivalent.
Note: Use of the specified mating connector is required to insure proper current capacity.	
Pin #	**Function**
7	+V1 (+24VDC) Output
8	DC Ground
9	Earth Ground
10	No Connection
11	N – Neutral (ACC) Input
12	L – Line (AC) Input
Note: Pin number assignments per CalTrans spec TEES 2009.	
SAFETY, REGULATORY AND EMC	
Designed to comply with the relevant industry standards of the authorities having jurisdiction, typically UL 60950-1, CSA 22.2 and IEC 60950.	
EMI Filtering	Meets CISPR22B Level B, EN55022 Level B, and FCC Part 15, Level B, for conducted emissions
Harmonics	Meets EN 61000-3 (harmonics and voltage fluctuations)
Touch Current	1.2mA max @ 50/60Hz, 264V AC per UL 60950 test procedures (Sec. 5.0)
Routine Factory Tests	Di-electric strength (hi-pot) to 2121V DC input- to-chassis and input-to-outputs; MegOhm to 500V output-to-chassis

**Specifications subject to change without notice.*

STANDARD MARKING AND LABELING

A 4.00"x1.75" (or smaller) adhesive label is applied to the rear panel. Imprinted with JE model identification data, including JE name, input/output ratings, model name, JE part number, a 4-digit (week/year) manufacturing date code and manufacturing facility identification code, and space to apply any future authorized product safety certification marks.

Space is available on labels for modified or custom models for a user specified part number or model description.
Use of non-standard JE labels, or user required marking, such as bar codes, user revision codes, user name or logo, etc, is possible but may incur additional costs. Consult the factory.

ENVIRONMENTAL CONSIDERATIONS

The model TC206LS is fully compliant with the requirements of Directive 2002/95/EC Restrictions of Hazardous Substances (RoHS). RoHS compliant models are identified with the letter code "G" suffix added to the part number on the unit labels and related documents (sales orders, etc). All materials, processes and packaging used in the assembly and shipping of RoHS versions comply.

A Certificate of Compliance is available on request. Contact the factory.

LIMITED WARRANTY POLICY

All Jasper Electronics (JE) standard model power supplies and products are guaranteed to be free of defects in workmanship and materials for a minimum of two (2) years from the date of original shipment, when operated within specification. Non-standard (custom) power supplies and products may be warranted on an individual basis. The unused portion of this warranty is fully transferable with the original equipment in which the power supply is installed. Please see our website for full warranty statement.

TC206LS OUTLINE DRAWING

Mechanical Outline

(Dimensions in inches[millimeters]. Not to scale.)

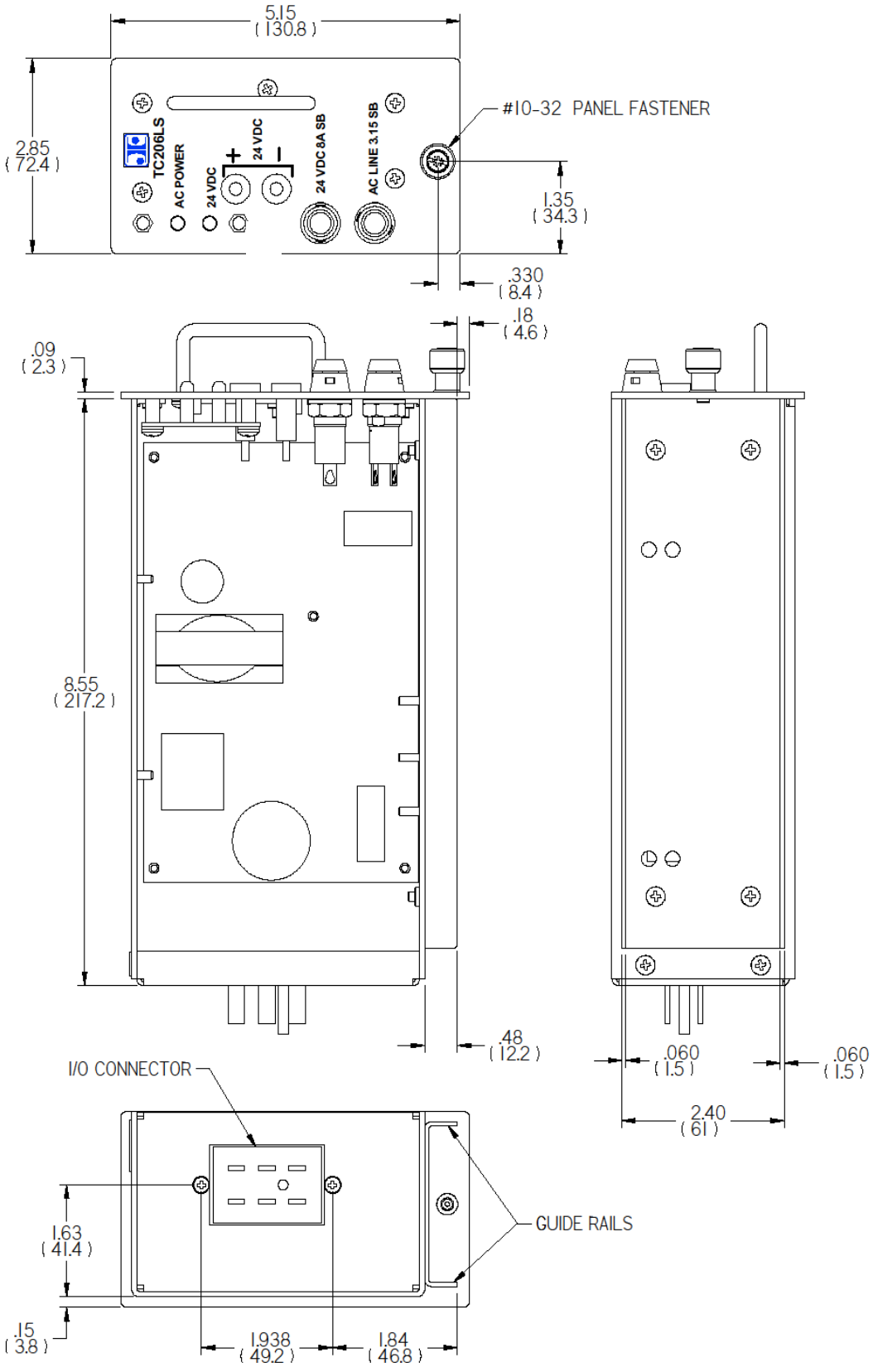

Jasper Electronics

1580 No. Kellogg Dr., Anaheim, California, 92807 USA

(714) 917-0749 • www.jasperelectronics.com • sales@jasperelectronics.com

Jasper Electronics

INNOVATIVE SPECIALTY DC POWER SYSTEMS

Standard and Custom Power Supplies from 5W to 10KW

TRAFFIC CONTROL POWER SUPPLIES



- 70-400+ Watts / 120 and 220 VAC Models Available
- CALTRANS TEES, NYSDOT, CDOT, GDOT Compliant for 332, 334, 336, 342, 344, and 346 Series cabinets
- RoHS and NEMA Compliant
- Custom labeling and barcoding available
- Ruggedization against shock / vibration / humidity available

CUSTOM POWER DISTRIBUTION ASSEMBLIES (PDAs)



- Compliant with TEES 2020
- 1U smaller than the PDA2-LX and PDA3-LX
- User accessible slots as specified
- Custom labeling and barcoding available
- Ruggedization against shock / vibration / humidity available

COMPACT PCI



- AC or DC input, 175W - 500W DC output, active PFC
- 3U x 8HP, 6U x 8HP sizes
- PICMG 2.11 compliant, UL/CSA, NEMKO/TUV/CE certified, ROHS compliant
- Ruggedization against shock/ vibration/ humidity optional

Primary Applications: Industrial Computing, Military, Satellite Comm, Test, Transportation, Telecom, Aerospace

SPECIALTY HOT-SWAPPABLE POWER SUPPLIES



- 200-1500W, Universal Input, 5-54VDC Output
- Hot Swap. N+1, 90+% Efficiency
- 1U Form Factors
- 30+ Variations for Various Applications Including Nuclear
- Ruggedization against shock/ vibration/ humidity optional

Primary Applications: Medical Equipment, Military, Test, Automotive, Computing, Audio, Sensitive Electronics

RACK POWER SYSTEMS



- 200W-1500W, 2-8 slots, single or mixed output voltages, up to 10KW total
- Single, dual, or individual unit AC or DC input
- Internally or externally redundant DC outputs
- Standard 19" and 23" size or user-specified configurations also available
- Ruggedization against shock/ vibration/ humidity optional

Primary Applications: Medical Equipment, Military, Test, Automotive, Computing, Audio, Sensitive Electronics

CUSTOMS & MODIFIED STANDARDS



- 75W-2KW
- Single to 7 outputs
- Designed and built to custom or semi-custom specifications
- Ruggedization against shock/ vibration/ humidity optional
- Custom electrical specs, chassis, paint, labeling, connectors, interface all available

Primary Applications: Medical Equipment, Military, Test, Automotive, Computing, Audio, Sensitive Electronics

LOW NOISE CONVECTION / CONDUCTION COOLED POWER SUPPLIES



- 200W-500W, 90—264VAC full range input with 12-54 VDC Output
- Wide operating temperature range / high efficiency
- Small form factors
- Ruggedization against shock/ vibration/ humidity optional

Primary Applications: Medical Equipment, Military, IT, Sensitive Electronics

MEDICAL ADAPTERS



- 6W-250W, Efficiency levels V & VI
- Desktop, Wall-mount, and Interchangeable AC plug types
- Large selection of output connectors – additional cable lengths available
- UL60601 (medical) approved adapters available
- Ruggedization against shock/ vibration/ humidity optional



Jasper Electronics

1580 No. Kellogg Dr., Anaheim, California, 92807 USA

(714) 917-0749 • www.jasperelectronics.com • sales@jasperelectronics.com