REVISIONS					
REV	ECO	DESCRIPTION	DATE	BY	APPR
A1	-	RELEASE	30MAR2017	JAH	-
A2	-	UPDATED HOOD GEOMETRY & REEL DIR.	26AUG2020	JAH	-
A3	C1298S	UPDATE PLATING	14/SEP/20	SULLEN	TOMMY
A4	-	MANUFACTURER NOTE	07JUL24	CJF	-

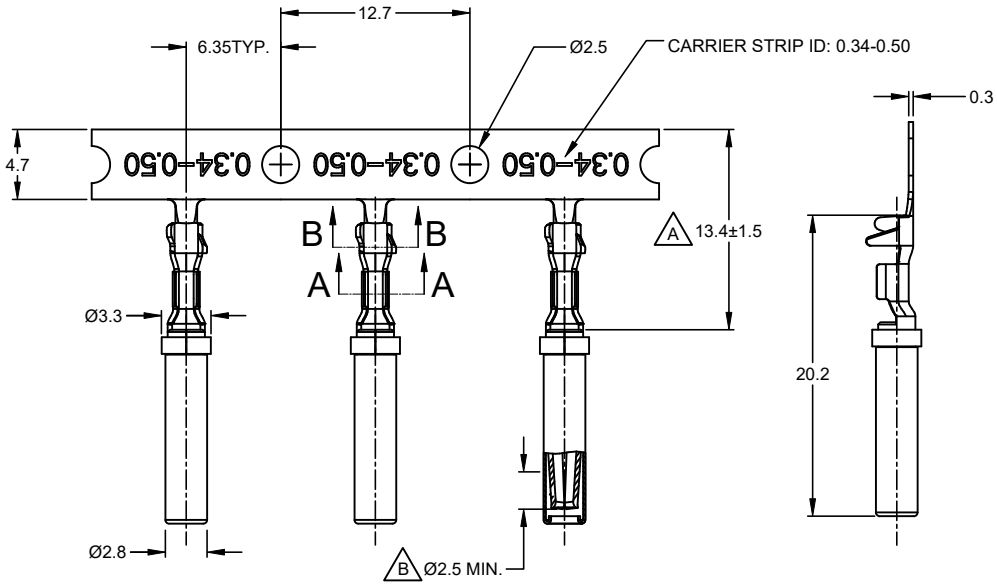

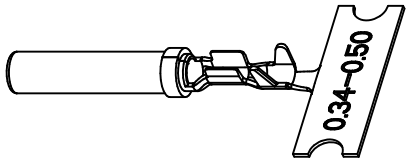

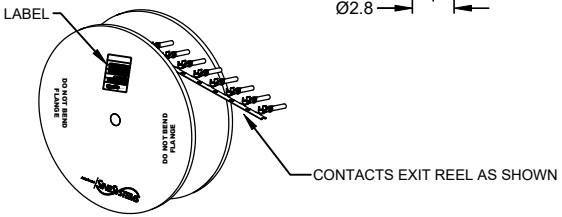

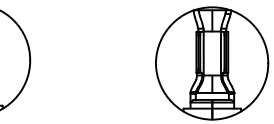

WITH RIBS FROM CHINA MANUFACTURER

WITHOUT RIBS FROM U.S MANUFACTURER

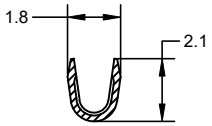

SECTION A-A

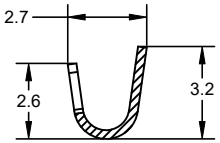

SECTION B-B

NOTES: UNLESS OTHERWISE SPECIFIED

1. MATERIAL: COPPER ALLOY

2. PLATING: SEE PART NUMBER CHART

3. CONTACT SIZE: 16

4. SPECIFICATIONS:
   4.1 CURRENT RATING: 13 AMPS
   4.2 CONTACT MILLIVOLT DROP: 100 MILLIVOLT DROP @ 13 AMP TEST CURRENT.
   4.3 RoHS COMPLIANT

5. RECOMMENDED WIRE RANGE: 20 - 22 AWG (0.5 - 0.35mm²)
   RECOMMENDED INSUL O.D: 1.31 - 1.50MM (0.051 - 0.059INCH)

6. PACKAGE: 4000 PCS/REEL

7. ALL DIMENSIONS ARE FOR REFERENCE USE ONLY

PART NUMBER CHART		
PLATING	PART NUMBER	PLATING DESCRIPTION
NICKEL	AT62-16-0822	SELECTIVE TIN OVER NICKEL OVERALL IN A ZONE
GOLD	AT62-16-0844	SELECTIVE GOLD FLASH OVER NICKEL OVERALL IN B ZONE OR ENTIRE CONTACT
TIN	AT62-16-0877	TIN OVER NICKEL OVERALL

	SEE CHART	
	PART NUMBER	DESCRIPTION	ITEM
QUANTITY	MATERIALS LIST	

UNLESS OTHERWISE SPECIFIED
1) All dimensions are in metric(mm).
2) Tolerances are as follows:
1 PL DEC ±0.30
2 PL DEC ±0.15
3 PL DEC ±0.08
Fractions ±1/64
Angles ±1°
3) Note reference = X

MATERIAL SPECIFICATIONS:

PROCESS SPECIFICATIONS:

NEXT ASS'Y:

SIGNATURES		DATE
DRAWN:	SULLEN ZHANG	14/SEP/20
CHECKED:	ORION LI	15/SEP/20
ENGINEER:		
APPROVAL:	TOMMY XIE	16/SEP/20
CUSTOMER:		

THIS DRAWING IS SUPPLIED FOR INFORMATION ONLY. DESIGN FEATURES, SPECIFICATIONS AND PERFORMANCE DATA SHOWN HEREON ARE THE PROPERTY OF THE AMPHENOL CORPORATION. NO RIGHTS OF REPRODUCTION ARE IMPLIED. ALL DIMENSIONS ARE SUBJECT TO NORMAL MANUFACTURING VARIATIONS.

Amphenol
Sine Systems - www.amphenol-sine.com
44724 Morley Drive
Clinton Township, MI 48036

CONTACT, SOCKET, STAMPED,
SIZE 16, 20-22 AWG, AT & AHD-9 SERIES

SIZE	TYPE	DWG NO:	REVISION
B	C-	AT62-16-08XX	A4

SCALE: NONE SHEET 1 OF 1

TITLE: CONTACT, STAMPED, SIZE 16, 20-22 AWG, AT & AHD-9 SERIES
DWG NO: AT62-16-08XX
REV: A4
SH: 1
OF: 1