V_{DSS}	100V
$R_{DS(on)}$ typ.	3.5mΩ
max	4.2mΩ
I_D (Silicon Limited)	192A

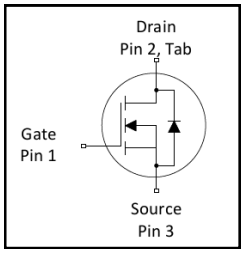

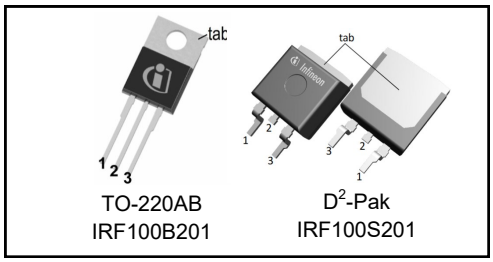

G	D	S
Gate	Drain	Source

Application
- Brushed Motor drive applications
- BLDC Motor drive applications
- Battery powered circuits
- Half-bridge and full-bridge topologies
- Synchronous rectifier applications
- Resonant mode power supplies
- OR-ing and redundant power switches
- DC/DC and AC/DC converters
- DC/AC Inverters

Benefits
- Improved Gate, Avalanche and Dynamic dV/dt Ruggedness
- Fully Characterized Capacitance and Avalanche SOA
- Enhanced body diode dV/dt and dI/dt Capability
- Lead-Free, RoHS Compliant, Halogen-Free

Base part number	Package Type	Standard Pack		Orderable Part Number
		Form	Quantity	
IRF100B201	TO-220	Tube	50	IRF100B201
IRF100S201	D^2-Pak	Tape and Reel	800	IRF100S201

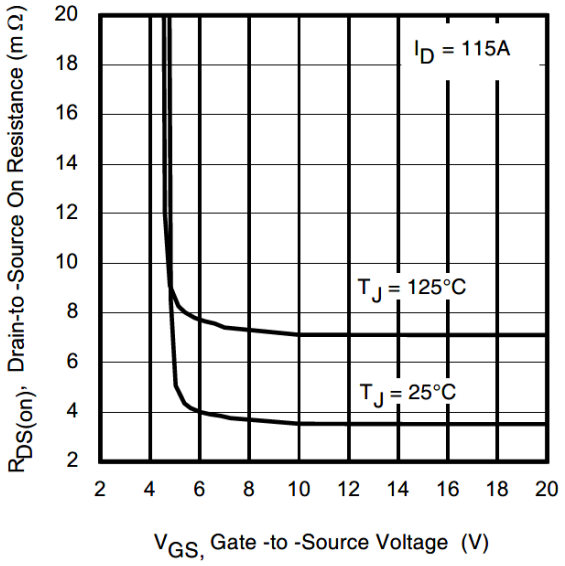

Fig 1. Typical On– Resistance vs. Gate Voltage

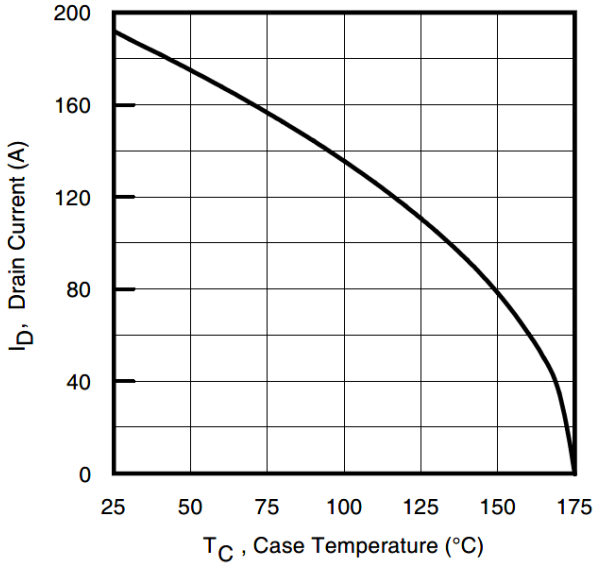

Fig 2. Maximum Drain Current vs. Case Temperature

Absolute Maximum Rating

Symbol	Parameter	Max.	Units
I_D @ T_C = 25°C	Continuous Drain Current, V_{GS} @ 10V	192	A
I_D @ T_C = 100°C	Continuous Drain Current, V_{GS} @ 10V	136	
I_{DM}	Pulsed Drain Current ①	690	
P_D @T_C = 25°C	Maximum Power Dissipation	441	W
	Linear Derating Factor	2.9	W/°C
V_{GS}	Gate-to-Source Voltage	± 20	V
T_J T_{STG}	Operating Junction and Storage Temperature Range	-55 to + 175	°C
	Soldering Temperature, for 10 seconds (1.6mm from case)	300	
	Mounting Torque, 6-32 or M3 Screw	10 lbf·in (1.1 N·m)	

Avalanche Characteristics

$E_{AS\ (Thermally\ limited)}$	Single Pulse Avalanche Energy ②	567	mJ
$E_{AS\ (Thermally\ limited)}$	Single Pulse Avalanche Energy ⑨	1005	
$E_{AS\ (tested)}$	Single Pulse Avalanche Energy Tested Value ⑩	240	
I_{AR}	Avalanche Current ①	See Fig 15, 15, 23a, 23b	A
E_{AR}	Repetitive Avalanche Energy ①		mJ

Thermal Resistance

Symbol	Parameter	Typ.	Max.	Units
$R_{\theta JC}$	Junction-to-Case ⑦	——	0.34	°C/W
$R_{\theta CS}$	Case-to-Sink, Flat Greased Surface	0.50	——	
$R_{\theta JA}$	Junction-to-Ambient	——	62	
$R_{\theta JA}$	Junction-to-Ambient (PCB Mount) ⑧	——	40	

Static @ T_J = 25°C (unless otherwise specified)

Symbol	Parameter	Min.	Typ.	Max.	Units	Conditions
$V_{(BR)DSS}$	Drain-to-Source Breakdown Voltage	100	——	——	V	V_{GS} = 0V, I_D = 250μA
$\Delta V_{(BR)DSS}/\Delta T_J$	Breakdown Voltage Temp. Coefficient	——	0.1	——	V/°C	Reference to 25°C, I_D = 5mA ①
$R_{DS(on)}$	Static Drain-to-Source On-Resistance	——	3.5	4.2	mΩ	V_{GS} = 10V, I_D = 115A
$V_{GS(th)}$	Gate Threshold Voltage	2.0	——	4.0	V	V_{DS} = V_{GS}, I_D = 250μA
I_{DSS}	Drain-to-Source Leakage Current	——	——	20	μA	V_{DS} =100 V, V_{GS} = 0V
		——	——	250		V_{DS} = 80V,V_{GS} = 0V,T_J =125°C
I_{GSS}	Gate-to-Source Forward Leakage	——	——	100	nA	V_{GS} = 20V
	Gate-to-Source Reverse Leakage	——	——	-100		V_{GS} = -20V
R_G	Gate Resistance	——	2.2	——	Ω	

Notes:

① Repetitive rating; pulse width limited by max. junction temperature.
② Limited by T_{Jmax}, starting T_J = 25°C, L = 86μH, R_G = 50Ω, I_{AS} = 115A, V_{GS} =10V.
③ $I_{SD} \leq$ 115A, di/dt ≤ 1400A/μs, $V_{DD} \leq V_{(BR)DSS}$, $T_J \leq$ 175°C.
④ Pulse width ≤ 400μs; duty cycle ≤ 2%.
⑤ C_{oss} eff. (TR) is a fixed capacitance that gives the same charging time as C_{oss} while V_{DS} is rising from 0 to 80% V_{DSS}.
⑥ C_{oss} eff. (ER) is a fixed capacitance that gives the same energy as C_{oss} while V_{DS} is rising from 0 to 80% V_{DSS}.
⑦ R_θ is measured at T_J approximately 90°C.
⑧ When mounted on 1 inch square PCB (FR-4). Please refer to AN-994 for more details:
⑨ Limited by T_{Jmax}, starting T_J = 25°C, L = 1.0mH, R_G = 50Ω, I_{AS} = 45A, V_{GS} =10V.
⑩ This value determined from sample failure population, starting T_J =25°C, L= 86μH, R_G = 50Ω, I_{AS} =115A, V_{GS} =10V.

Dynamic Electrical Characteristics @ T_J = 25°C (unless otherwise specified)

Symbol	Parameter	Min.	Typ.	Max.	Units	Conditions
gfs	Forward Transconductance	278	—	—	S	V_{DS} = 10V, I_D = 115A
Q_g	Total Gate Charge	—	170	255	nC	I_D = 115A
Q_{gs}	Gate-to-Source Charge	—	46	—		V_{DS} = 50V
Q_{gd}	Gate-to-Drain Charge	—	45	—		V_{GS} = 10V
Q_{sync}	Total Gate Charge Sync. (Qg– Qgd)	—	125	—		
$t_{d(on)}$	Turn-On Delay Time	—	17	—	ns	V_{DD} = 65V
t_r	Rise Time	—	97	—		I_D = 115A
$t_{d(off)}$	Turn-Off Delay Time	—	110	—		R_G= 2.7Ω
t_f	Fall Time	—	100	—		V_{GS} = 10V④
C_{iss}	Input Capacitance	—	9500	—	pF	V_{GS} = 0V
C_{oss}	Output Capacitance	—	660	—		V_{DS} = 50V
C_{rss}	Reverse Transfer Capacitance	—	310	—		f = 1.0MHz, See Fig.TBD
$C_{oss\ eff.(ER)}$	Effective Output Capacitance (Energy Related)	—	725	—		V_{GS} = 0V, VDS = 0V to 80V⑥
$C_{oss\ eff.(TR)}$	Output Capacitance (Time Related)	—	950	—		V_{GS} = 0V, VDS = 0V to 80V⑤

Diode Characteristics

Symbol	Parameter	Min.	Typ.	Max.	Units	Conditions
I_S	Continuous Source Current (Body Diode)	—	—	192	A	MOSFET symbol showing the integral reverse p-n junction diode.
I_{SM}	Pulsed Source Current (Body Diode) ①	—	—	690		
V_{SD}	Diode Forward Voltage	—	—	1.3	V	T_J = 25°C,I_S = 115A,V_{GS} = 0V ④
dv/dt	Peak Diode Recovery dv/dt③	—	18	—	V/ns	T_J = 175°C,I_S =115A,V_{DS} = 100V
t_{rr}	Reverse Recovery Time	—	47	—	ns	T_J = 25°C V_{DD} = 85V
		—	55	—		T_J = 125°C I_F = 115A,
Q_{rr}	Reverse Recovery Charge	—	90	—	nC	T_J = 25°C di/dt = 100A/μs ④
		—	123	—		T_J = 125°C
I_{RRM}	Reverse Recovery Current	—	3.5	—	A	T_J = 25°C

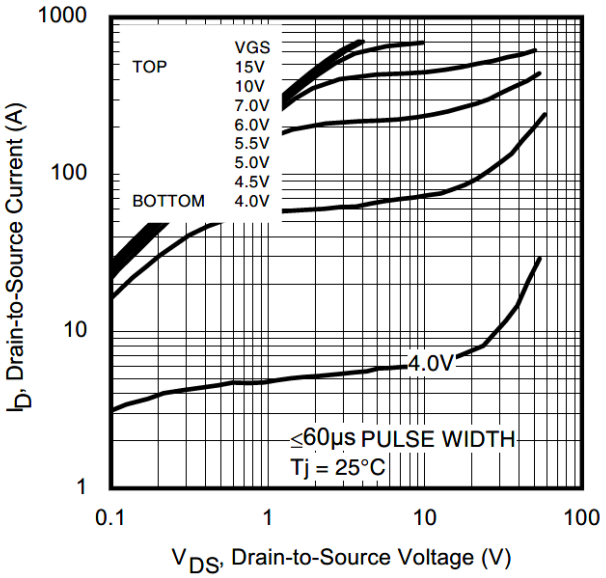

Fig 3. Typical Output Characteristics

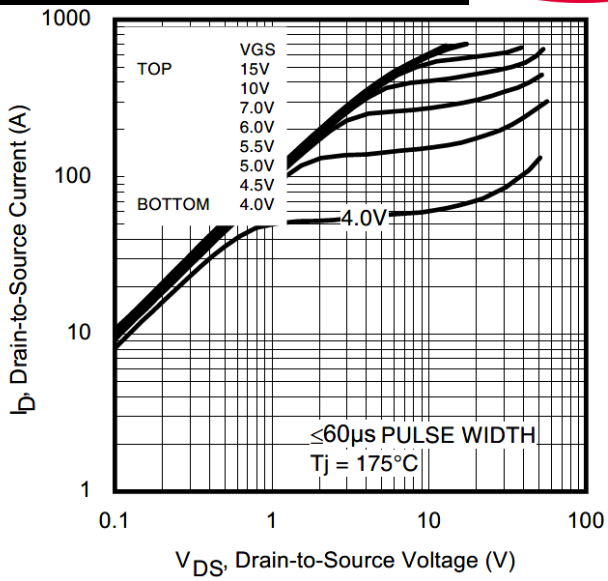

Fig 4. Typical Output Characteristics

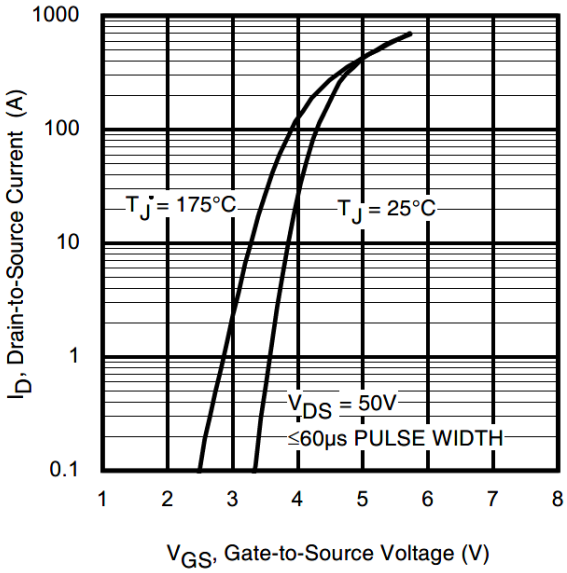

Fig 5. Typical Transfer Characteristics

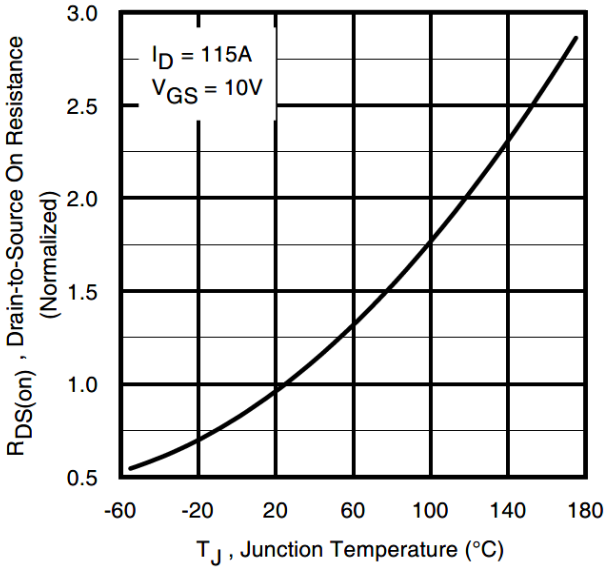

Fig 6. Normalized On-Resistance vs. Temperature

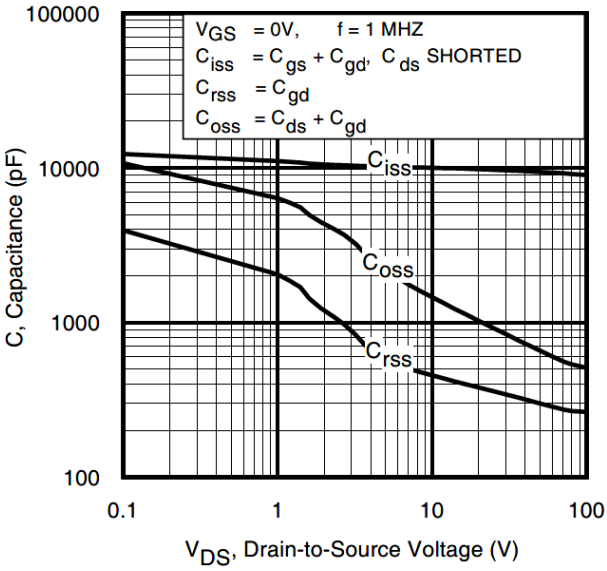

Fig 7. Typical Capacitance vs. Drain-to-Source Voltage

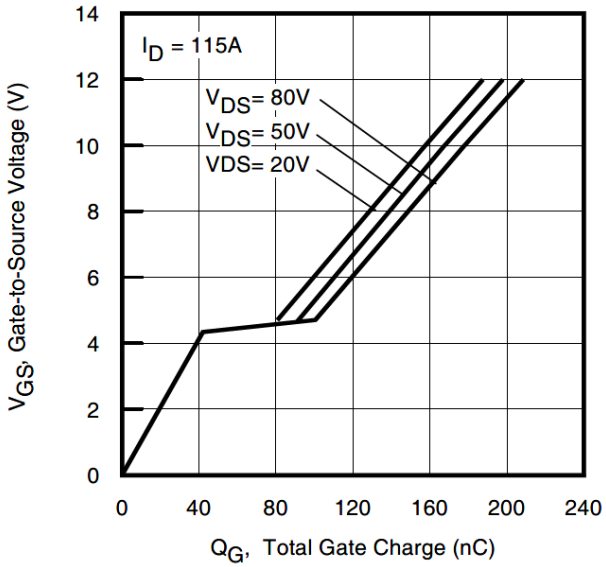

Fig 8. Typical Gate Charge vs.Gate-to-Source Voltage

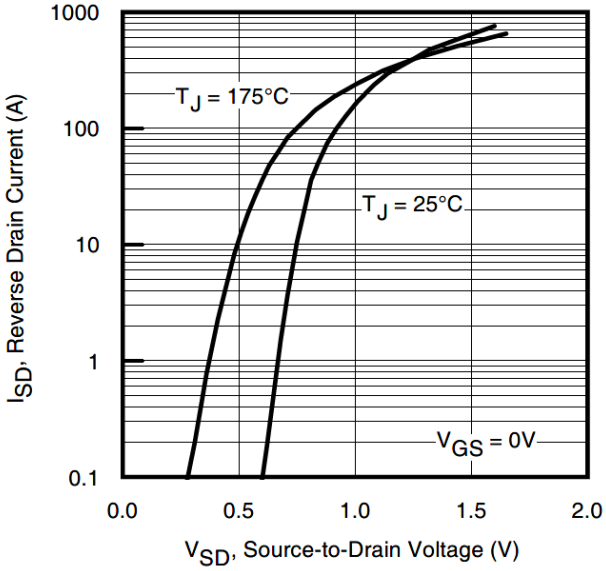

Fig 9. Typical Source-Drain Diode Forward Voltage

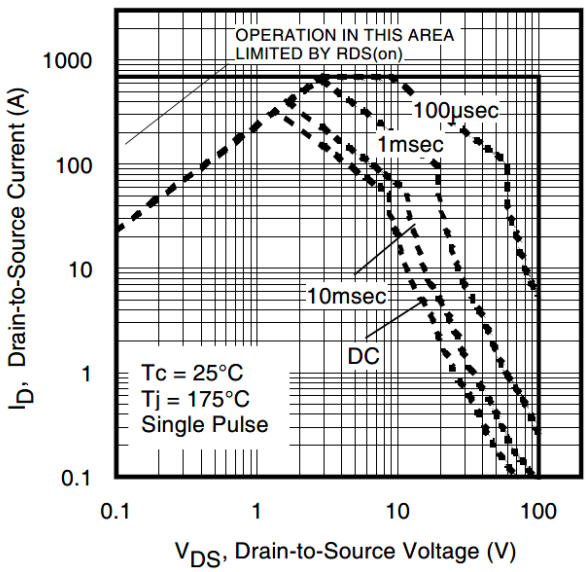

Fig 10. Maximum Safe Operating Area

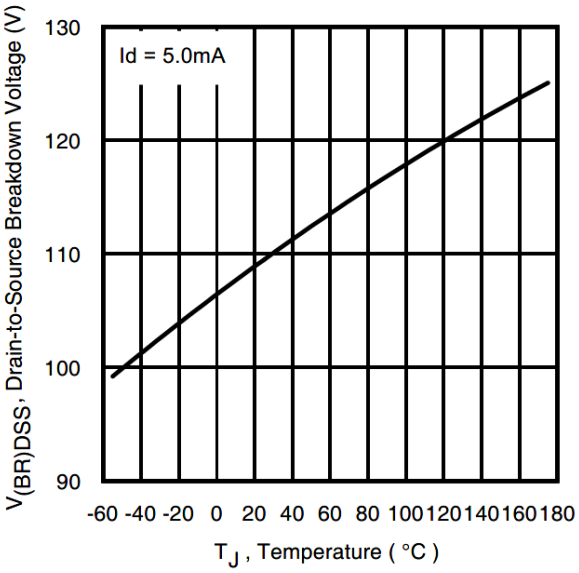

Fig 11. Drain-to-Source Breakdown Voltage

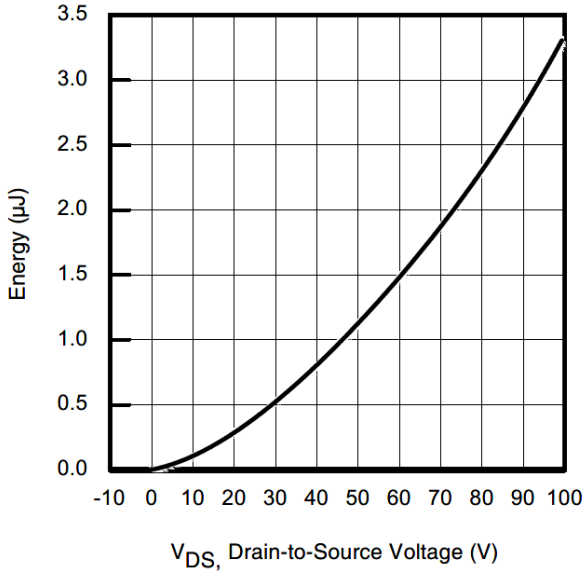

Fig 12. Typical C_{oss} Stored Energy

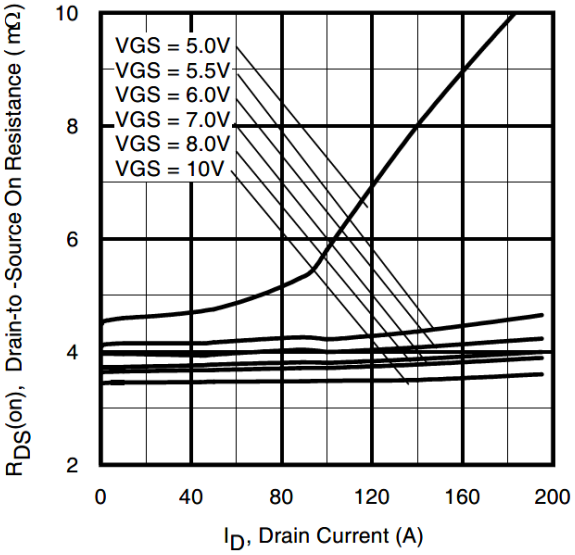

Fig 13. Typical On– Resistance vs. Drain Current

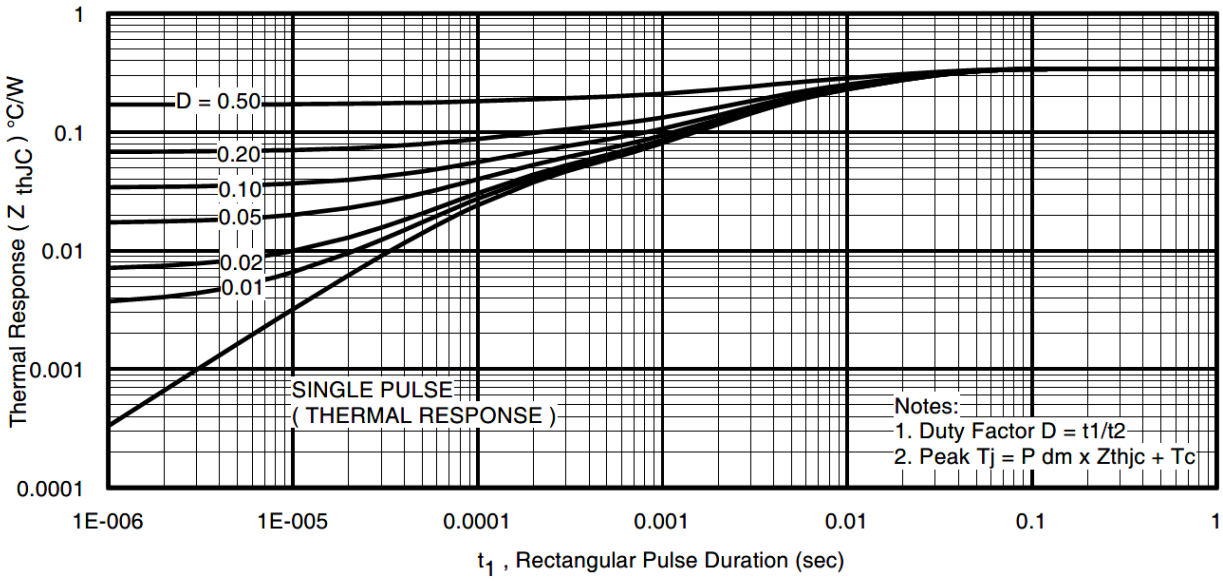

Fig 14. Maximum Effective Transient Thermal Impedance, Junction-to-Case

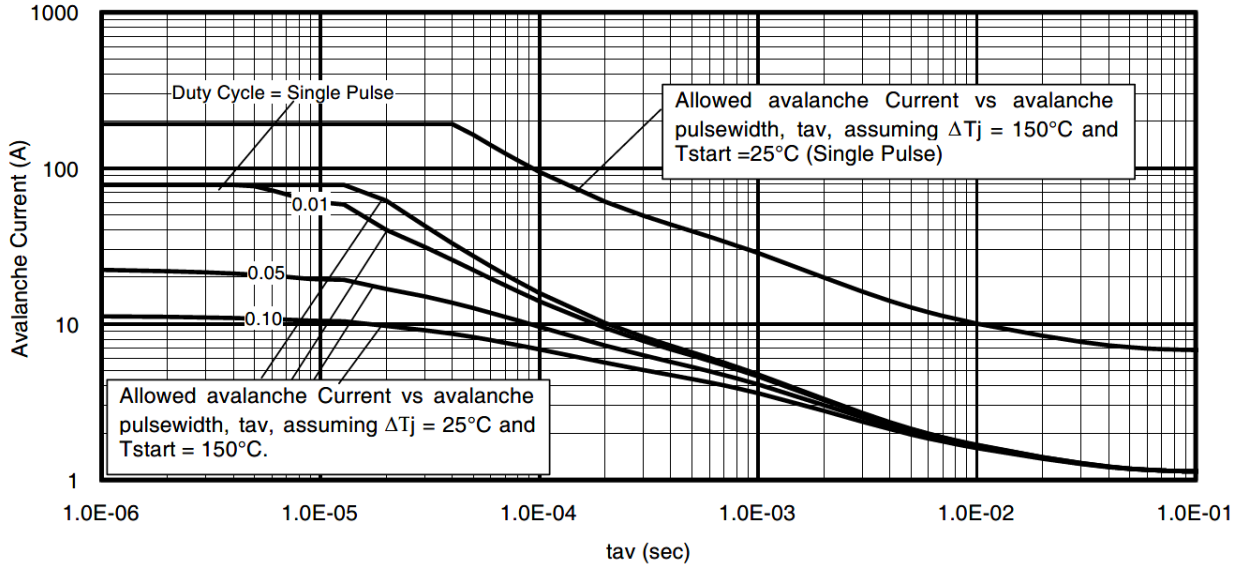

Fig 15. Avalanche Current vs. Pulse Width

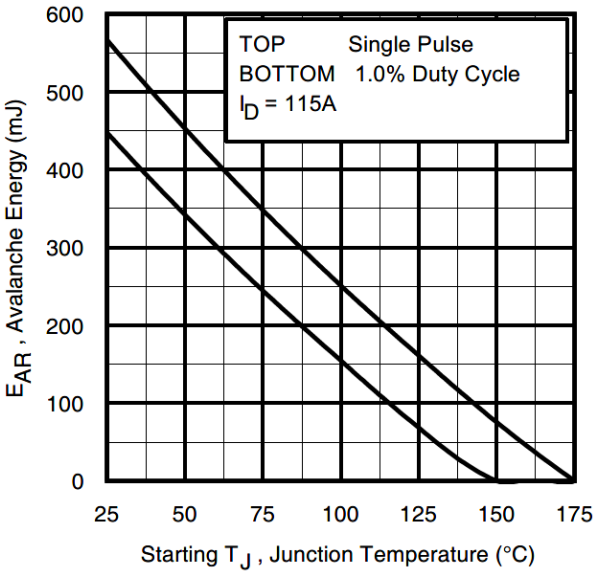

Fig 16. Maximum Avalanche Energy vs. Temperature

Notes on Repetitive Avalanche Curves , Figures 15, 16:
(For further info, see AN-1005 at www.irf.com)

1. Avalanche failures assumption:
   Purely a thermal phenomenon and failure occurs at a temperature far in excess of T_{jmax}. This is validated for every part type.
2. Safe operation in Avalanche is allowed as long as T_{jmax} is not exceeded.
3. Equation below based on circuit and waveforms shown in Figures 23a, 23b.
4. $P_{D\,(ave)}$ = Average power dissipation per single avalanche pulse.
5. BV = Rated breakdown voltage (1.3 factor accounts for voltage increase during avalanche).
6. I_{av} = Allowable avalanche current.
7. ΔT = Allowable rise in junction temperature, not to exceed T_{jmax} (assumed as 25°C in Figure 14, 15).

   t_{av} = Average time in avalanche.
   D = Duty cycle in avalanche = tav ·f
   $Z_{thJC}(D, t_{av})$ = Transient thermal resistance, see Figures 14)

$$PD\ (ave) = 1/2\ (1.3 \cdot BV \cdot I_{av}) = \Delta T / Z_{thJC}$$
$$I_{av} = 2\Delta T / [1.3 \cdot BV \cdot Z_{th}]$$
$$E_{AS\,(AR)} = P_{D\,(ave)} \cdot t_{av}$$

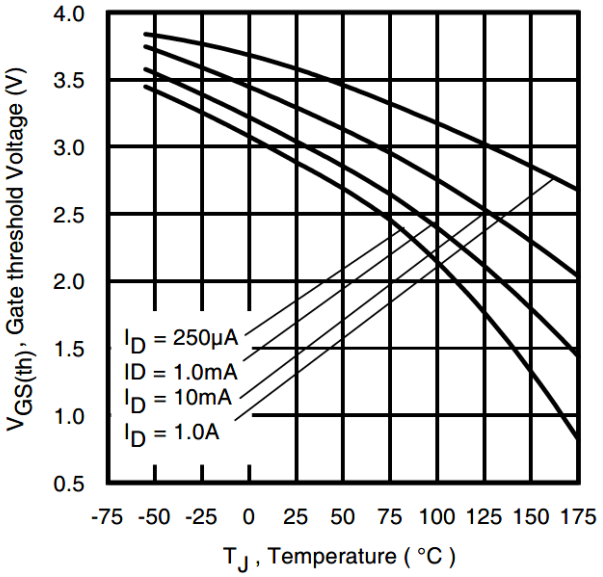

Fig 17. Threshold Voltage vs. Temperature

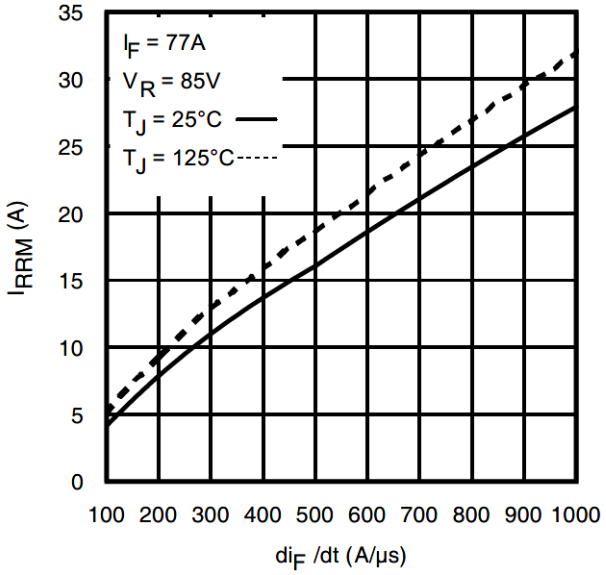

Fig 18. Typical Recovery Current vs. dif/dt

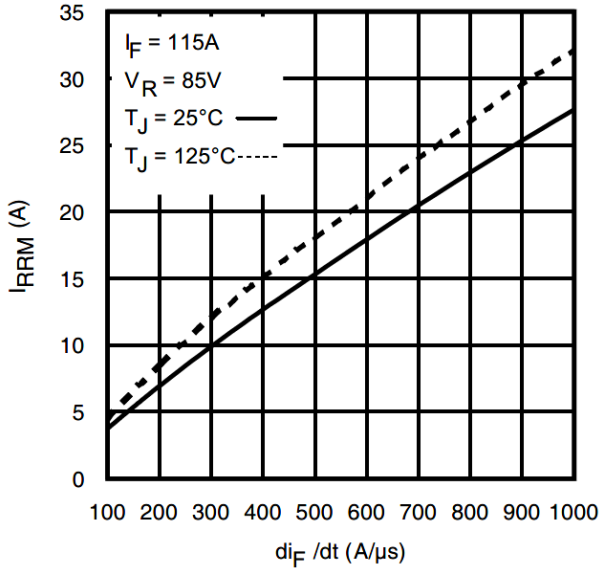

Fig 19. Typical Recovery Current vs. dif/dt

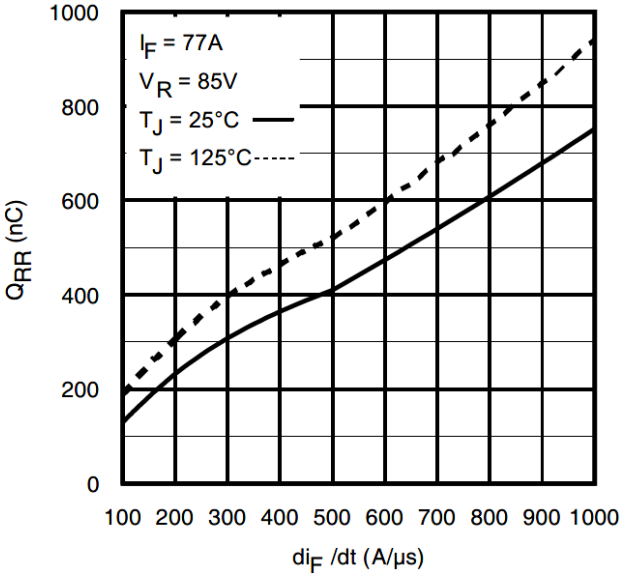

Fig 20. Typical Stored Charge vs. dif/dt

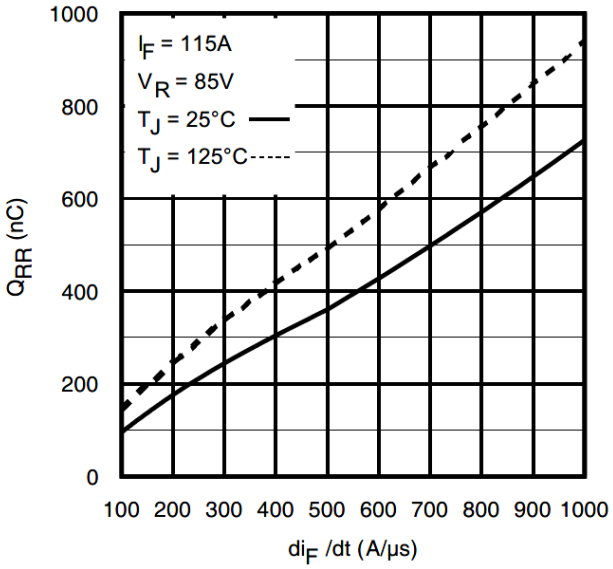

Fig 21. Typical Stored Charge vs. dif/dt

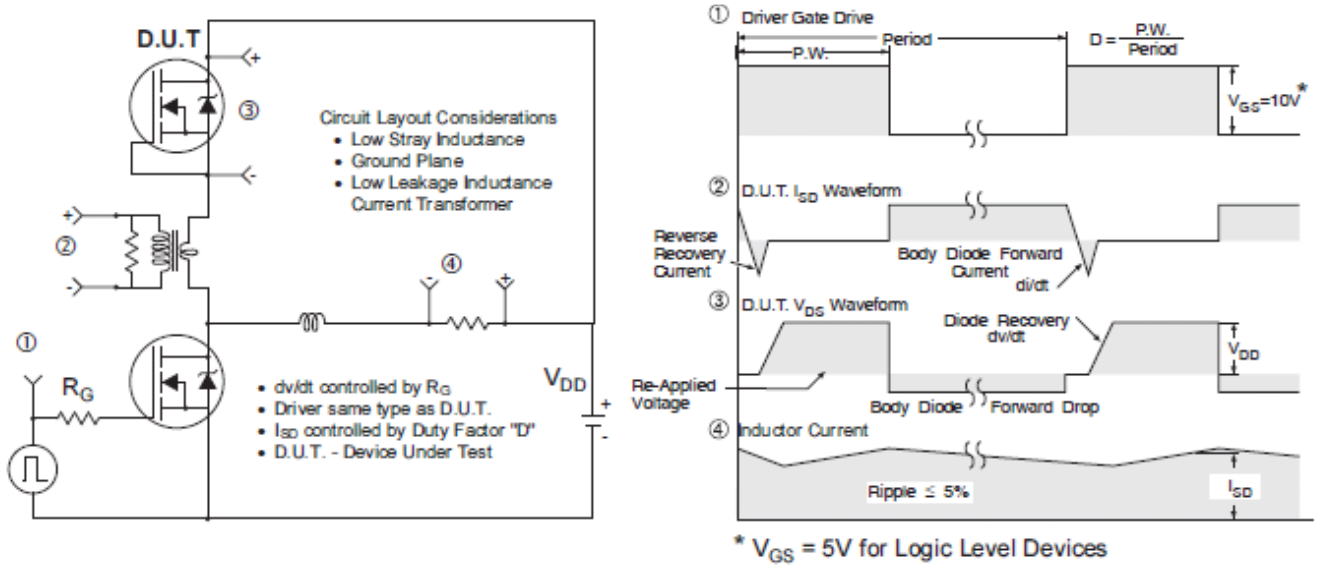

Fig 22. Peak Diode Recovery dv/dt Test Circuit for N-Channel HEXFET® Power MOSFETs

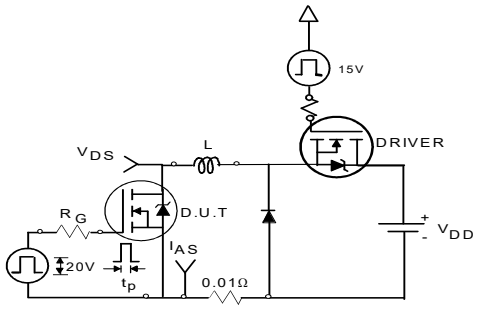

Fig 23a. Unclamped Inductive Test Circuit

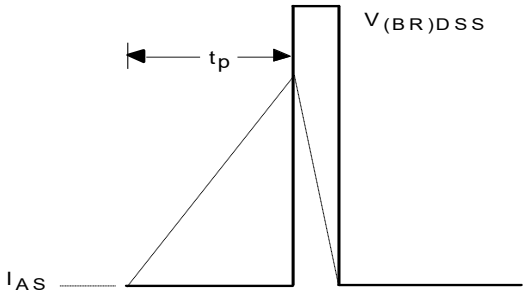

Fig 23b. Unclamped Inductive Waveforms

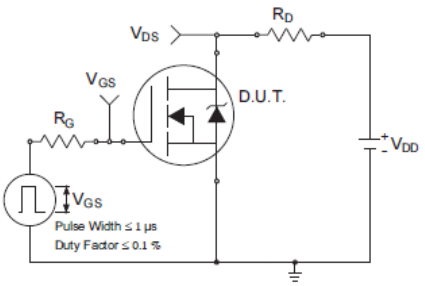

Fig 24a. Switching Time Test Circuit

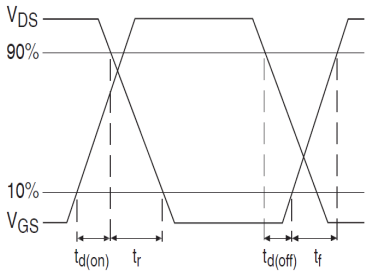

Fig 24b. Switching Time Waveforms

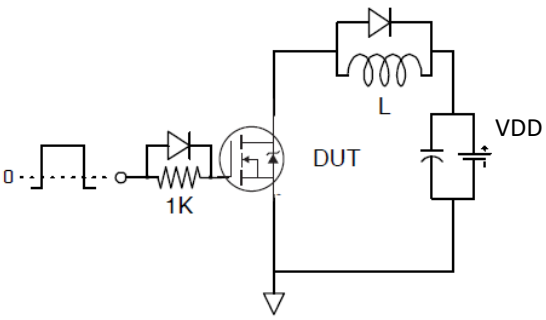

Fig 25a. Gate Charge Test Circuit

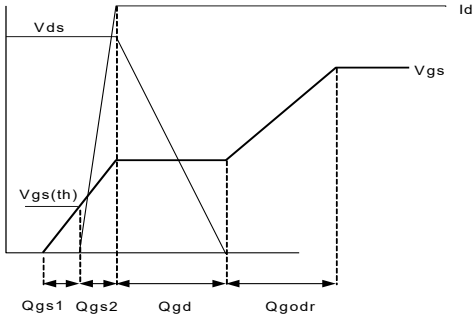

Fig 25b. Gate Charge Waveform

TO-220AB Package Outline (Dimensions are shown in millimeters (inches))

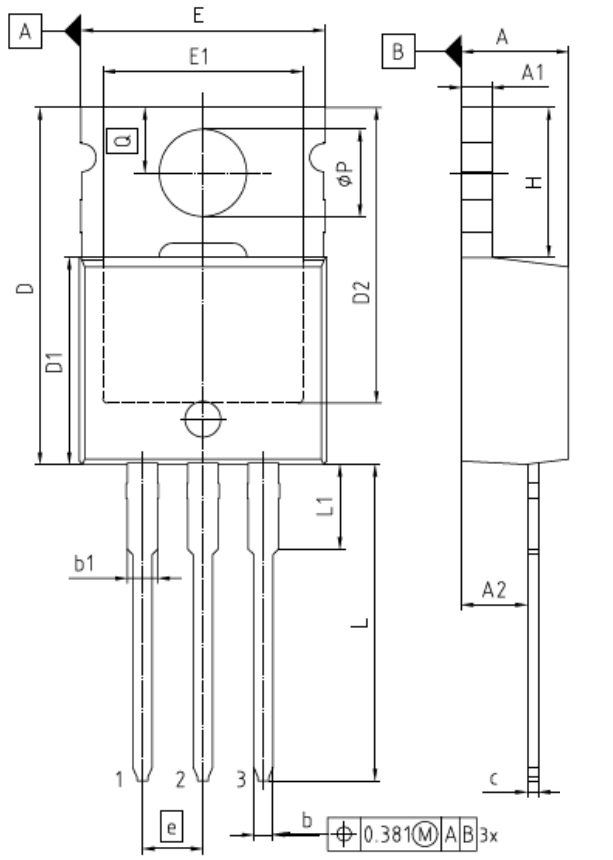

NOTES:
DIMENSIONS DO NOT INCLUDE MOLD FLASH, PROTRUSION OR GATE BURRS
GATE BURRS ARE LESS THAN 0.5 mm

PACKAGE - GROUP NUMBER:	PG-TO220-3-U05	
DIMENSIONS	MILLIMETERS	
	MIN.	MAX.
A	3.56	4.83
A1	1.14	1.40
A2	2.03	2.92
b	0.38	1.01
b1	1.14	1.78
c	0.36	0.61
D	14.22	16.51
D1	8.38	9.20
D2	11.68	12.88
E	9.65	10.67
E1	6.86	8.89
e	2.54	
N	3	
H	5.84	6.86
L	12.70	14.73
L1	3.56	4.06
øP	3.54	4.08
Q	2.54	3.42

TO-220AB Part Marking Information

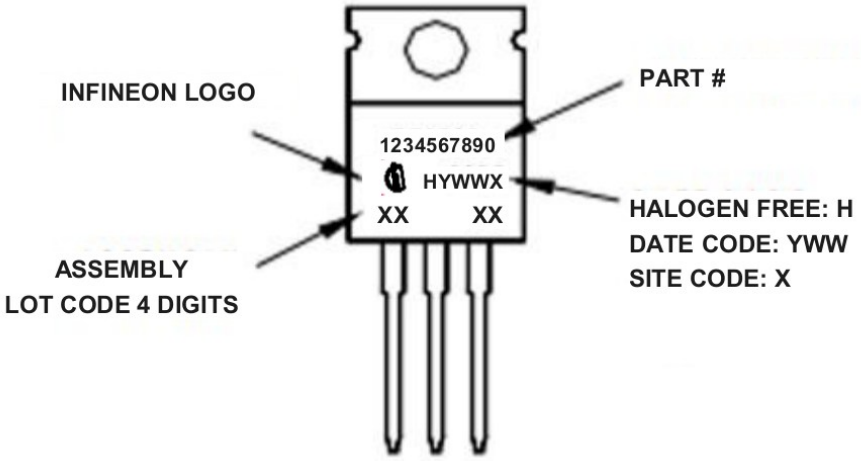

TO-220AB packages are not recommended for Surface Mount Application.

D²Pak (TO-263AB) Package Outline (Dimensions are shown in millimeters (inches))

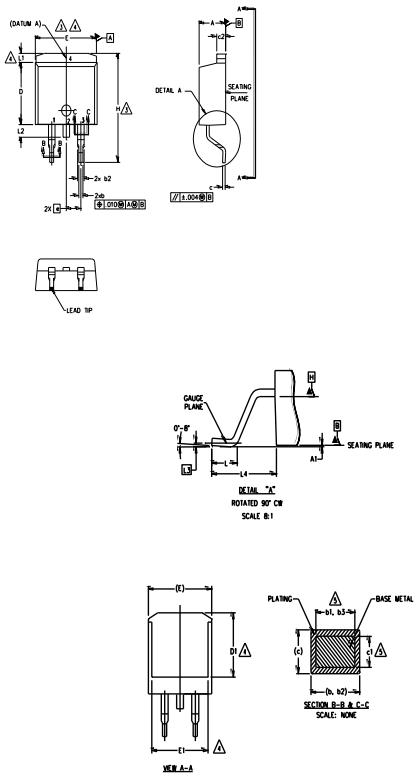

NOTES:

1. DIMENSIONING AND TOLERANCING PER ASME Y14.5M-1994
2. DIMENSIONS ARE SHOWN IN MILLIMETERS [INCHES].
3. DIMENSION D & E DO NOT INCLUDE MOLD FLASH. MOLD FLASH SHALL NOT EXCEED 0.127 [.005"] PER SIDE. THESE DIMENSIONS ARE MEASURED AT THE OUTMOST EXTREMES OF THE PLASTIC BODY AT DATUM H.
4. THERMAL PAD CONTOUR OPTIONAL WITHIN DIMENSION E, L1, D1 & E1.
5. DIMENSION b1 AND c1 APPLY TO BASE METAL ONLY.
6. DATUM A & B TO BE DETERMINED AT DATUM PLANE H.
7. CONTROLLING DIMENSION: INCH.
8. OUTLINE CONFORMS TO JEDEC OUTLINE TO-263AB.

SYMBOL	DIMENSIONS				NOTES
	MILLIMETERS		INCHES		
	MIN.	MAX.	MIN.	MAX.	
A	4.06	4.83	.160	.190	
A1	0.00	0.254	.000	.010	
b	0.51	0.99	.020	.039	
b1	0.51	0.89	.020	.035	5
b2	1.14	1.78	.045	.070	
b3	1.14	1.73	.045	.068	5
c	0.38	0.74	.015	.029	
c1	0.38	0.58	.015	.023	5
c2	1.14	1.65	.045	.065	
D	8.38	9.65	.330	.380	3
D1	6.86	–	.270		4
E	9.65	10.67	.380	.420	3,4
E1	6.22	–	.245		4
e	2.54 BSC		.100 BSC		
H	14.61	15.88	.575	.625	
L	1.78	2.79	.070	.110	
L1	–	1.65	–	.066	4
L2	1.27	1.78	–	.070	
L3	0.25 BSC		.010 BSC		
L4	4.78	5.28	.188	.208	

LEAD ASSIGNMENTS

HEXFET

1.– GATE
2, 4.– DRAIN
3.– SOURCE

IGBTs, CoPACK

1.– GATE
2, 4.– COLLECTOR
3.– EMITTER

DIODES

1.– ANODE *
2, 4.– CATHODE
3.– ANODE

* PART DEPENDENT.

D²Pak (TO-263AB) Part Marking Information

EXAMPLE: THIS IS AN IRF530S WITH LOT CODE 8024
ASSEMBLED ON WW 02, 2000
IN THE ASSEMBLY LINE "L"

Note: "P" in assembly line position indicates "Lead – Free"

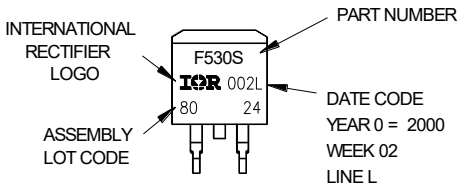

OR

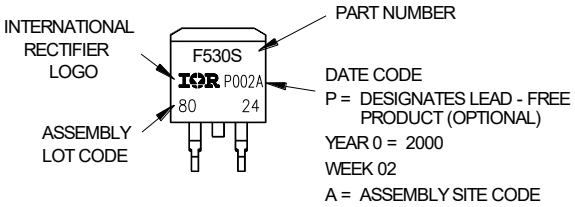

D²Pak (TO-263AB) Tape & Reel Information (Dimensions are shown in millimeters (inches))

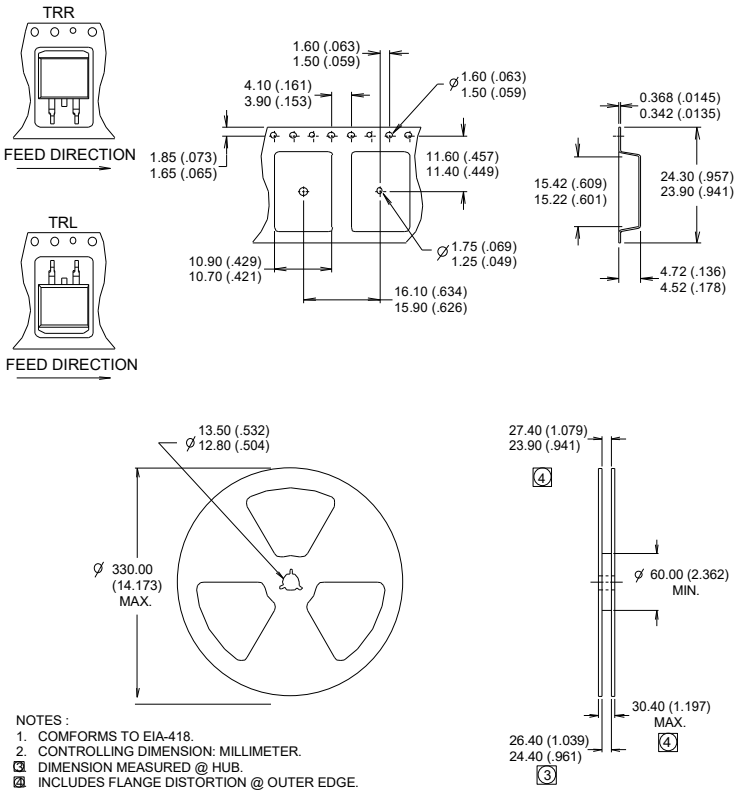

NOTES :
1. COMFORMS TO EIA-418.
2. CONTROLLING DIMENSION: MILLIMETER.
3. DIMENSION MEASURED @ HUB.
4. INCLUDES FLANGE DISTORTION @ OUTER EDGE.

Qualification Information†

Qualification Level	Industrial (per JEDEC JESD47F) ††	
Moisture Sensitivity Level	TO-220	N/A
	D^2Pak	MSL1
RoHS Compliant	Yes	

† Qualification standards can be found at International Rectifier's web site: https://www.infineon.com/

†† Applicable version of JEDEC standard at the time of product release.

Revision History

Date	Rev.	Comments
2026-07-17	2.1	• Update datasheet to Infineon format • Updated Package Outline and Part marking –page 9 • Added disclaimer on last page.

Trademarks

All referenced product or service names and trademarks are the property of their respective owners.

Published by Infineon Technologies AG, Am Campeon 1⊠15, 85579 Neubiberg, Germany
Copyright (c) 2026 Infineon Technologies AG and its affiliates. All Rights Reserved.

Important notice

The product is not developed and released for series supply by Infineon.
Subject to the development and release of the product for series supply by Infineon, the technical specifications of the product are set forth in the relevant final product data sheet provided by Infineon.

Infineon reserves the right to change all information given in this document at any time without notice.

Products which may also include samples and may be comprised of hardware or software or both ("Product(s)") are sold or provided and delivered by Infineon Technologies AG and its affiliates ("Infineon") subject to the terms and conditions of the frame supply contract or other written agreement(s) executed by a customer and Infineon or, in the absence of the foregoing, the applicable Sales Conditions of Infineon. General terms and conditions of a customer or deviations from applicable Sales Conditions of Infineon shall only be binding for Infineon if and to the extent Infineon has given its express written consent.

For the avoidance of doubt, Infineon disclaims all warranties of non-infringement of third-party rights and implied warranties such as warranties of fitness for a specific use/purpose or merchantability.

Infineon shall not be responsible for any information with respect to samples, the application or customer's specific use of any Product or for any examples or typical values given in this document.

The data contained in this document is exclusively intended for technically qualified and skilled customer representatives. It is the responsibility of the customer to evaluate the suitability of the Product for the intended application and the customer's specific use and to verify all relevant technical data contained in this document in the intended application and the customer's specific use. The customer is responsible for properly designing, programming, and testing the functionality and safety of the intended application, as well as complying with any legal requirements related to its use.

Unless otherwise explicitly approved by Infineon, Products may not be used in any application where a failure of the Products or any consequences of the use thereof can reasonably be expected to result in personal injury. However, the foregoing shall not prevent the customer from using any Product in such fields of use that Infineon has explicitly designed and sold it for, provided that the overall responsibility for the application lies with the customer.

Infineon expressly reserves the right to use its content for commercial text and data mining (TDM) according to applicable laws, e.g. Section 44b of the German Copyright Act (UrhG).

If the Product includes security features: Because no computing device can be absolutely secure, and despite security measures implemented in the Product, Infineon does not guarantee that the Product will be free from intrusion, data theft or loss, or other breaches ("Security Breaches"), and Infineon shall have no liability arising out of any Security Breaches.

If this document includes or references software:
The software is owned by Infineon under the intellectual property laws and treaties of the United States, Germany, and other countries worldwide. All rights reserved. Therefore, you may use the software only as provided in the software license agreement accompanying the software. If no software license agreement applies, Infineon hereby grants you a personal, non-exclusive, non-transferable license (without the right to sublicense) under its intellectual property rights in the software (a) for software provided in source code form, to modify and reproduce the software solely for use with Infineon hardware products, only internally within your organization, and (b) to distribute the software in binary code form externally to end users, solely for use on Infineon hardware products. Any other use, reproduction, modification, translation, or compilation of the software is prohibited.

For further information on the Product, technology, delivery terms and conditions, and prices, please contact your nearest Infineon office or visit https://www.infineon.com.