3-V to 5.5-V, 250-kbps RS-232 Transceivers

Features

- Meets the Requirements of TIA/EIA-232-F and ITU V.28 Standards
- Wide Power Supply Range: Single +3 V to +5.5 V
- Two Drivers and Two Receivers
- Operates up to 250 kbps
- Typically Requires Four External 0.1-μF Capacitors
- ESD Protection for RS-232 Bus Pins
  - ±15 kV (HBM)
  - ±12 kV (IEC61000-4-2, Contact Discharge)
  - ±15 kV (IEC61000-4-2, Air-Gap Discharge)

Applications

- Battery-Powered Equipment
- Industry Human Machine Interface
- Notebook, Computers
- Printers

Description

The TPT3232E devices are IEC61000 ESD protected, 3.0-V to 5.5-V powered transceivers that meet the RS-232 standards for balanced communication. Each receiver converts TIA/RS-232 inputs to TTL/CMOS levels.

The devices have a typical threshold of 1.25 V, a typical hysteresis of 0.3 V, and accept ±15-V inputs. The devices operate at data signaling rates up to 250 kbps. The TPT3232E devices are available in SOP16, SSOP16, and TSSOP16 packages, and are characterized from –40°C to 125°C.

Device Table

Device	Package	Body Size
TPT3232E-SO3R	SOP16	9.9 mm x 3.9 mm
TPT3232E-SS3R	SSOP16	6.2 mm x 5.3 mm
TPT3232E-TS3R	TSSOP16	5.0 mm x 4.4 mm

Typical Application Circuit

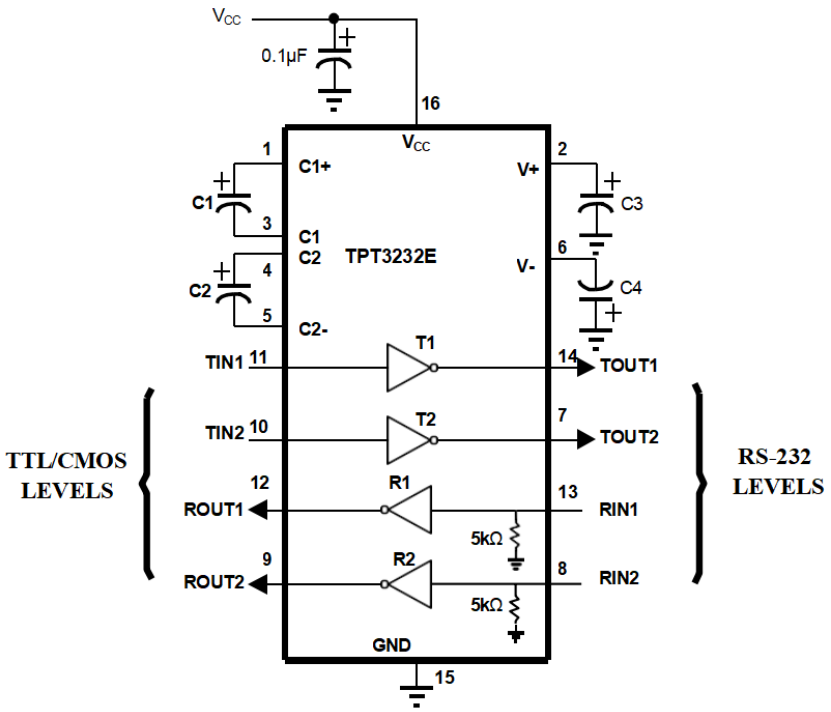

Table of Contents

Features 1
Applications 1
Description 1
Typical Application Circuit 1
Revision History 3
Pin Configuration and Functions 4
Specifications 5
Absolute Maximum Ratings (1) 5
ESD, Electrostatic Discharge Protection 5
Recommended Operating Conditions 5
Thermal Information 6
Electrical Characteristics 7
Parameter Measurement Information 8
Detailed Description 9
Functional Block Diagram 9
Application and Implementation 10
Typical Application 10
Tape and Reel Information 11
Package Outline Dimensions 12
SOP16 12
SSOP16 13
TSSOP16 14
Order Information 15
IMPORTANT NOTICE AND DISCLAIMER 16

Revision History

Date	Revision	Notes
2019-02-22	Rev.Pre.0	Preliminary version.
2020-02-18	Rev.A.0	Initial release.
2020-04-24	Rev.B.0	Updated the recommended value of C1 to C4.
2023-11-16	Rev.C.0	Added the disclaimer.
2024-12-24	Rev.C.1	Updated to a new datasheet format. Updated the POD.
2025-04-09	Rev.C.2	Added the recommended operating conditions.
2026-03-20	Rev.C.3	The following updates are all about the new datasheet formats or typos, and the actual product remains unchanged. Updated the tape and reel information.

Pin Configuration and Functions

TPT3232E
SOP16/SSOP16/TSSOP16
Top View

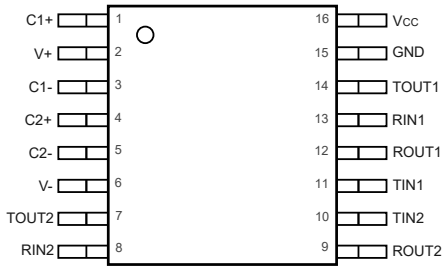

Table 1. Pin Functions: TPT3232E

Pin No.	Name	I/O	Description
1	C1+	-	Positive lead of the C1 capacitor.
2	V+	O	Positive charge pump output for the storage capacitor only.
3	C1−	-	Negative lead of the C1 capacitor.
4	C2+	-	Positive lead of the C2 capacitor.
5	C2−	-	Negative lead of the C2 capacitor.
6	V−	O	Negative charge pump output for the storage capacitor only.
7	TOUT2	O	Output of the RS232 driver, RS232 level.
8	RIN2	I	Input of the RS232 receiver, RS232 level.
9	ROUT2	O	Output of the RS232 receiver, TTL/CMOS levels.
10	TIN2	I	Input of the RS232 driver, TTL/CMOS levels.
11	TIN1	I	Input of the RS232 driver, TTL/CMOS levels.
12	ROUT1	O	Output of the RS232 receiver, TTL/CMOS levels.
13	RIN1	I	Input of the RS232 receiver, RS232 level.
14	TOUT1	O	Output of the RS232 driver, RS232 level.
15	GND	-	Ground.
16	V_{CC}	-	Supply voltage.

Specifications

Absolute Maximum Ratings (1)

Parameters		Min	Max	Unit
V_{CC}	Supply Voltage	−0.3	6	V
V+	Positive Output Supply Voltage	−0.3	7	V
V–	Negative Output Supply Voltage	−7	0.3	V
(V+) – (V–)	Supply Voltage Difference		13	V
TIN1, TIN2	Input Voltage of Driver, TTL/CMOS Levels	−0.3	6	V
TOUT1, TOUT2	Output Voltage of Driver, RS232 Level	−13.2	13.2	V
RIN1, RIN2	Input Voltage of Receiver, RS232 Level	−15	15	V
ROUT1, ROUT2	Output Voltage of Receiver, TTL/CMOS Levels	−0.3	V_{CC} + 0.3	V
T_J	Operating Virtual Junction Temperature		150	°C

(1) Stresses beyond the Absolute Maximum Ratings may cause permanent damage to the device. These are stress ratings only, which do not imply functional operation of the device at these or any other conditions beyond those indicated under Recommended Operating Conditions.

ESD, Electrostatic Discharge Protection

Parameter		Condition	Minimum Level	Unit
HBM	Human Body Model ESD	RS232 Bus Pins: TOUT1, TOUT2, RIN1, RIN2	±15	kV
		All Pins except RS232 Bus Pins	±6	kV
CDM	Charged Device Model ESD	All Pins	±1.5	kV
	Contact Discharge	IEC-61000-4-2, RS232 Bus Pins: TOUT1, TOUT2, RIN1, RIN2	±12	kV
	Air-Gap Discharge	IEC-61000-4-2, RS232 Bus Pins: TOUT1, TOUT2, RIN1, RIN2	±15	kV

Recommended Operating Conditions

Parameter		Min	Typ	Max	Unit
V_{CC}	Power Supply	3.0		5.5	V
$V_{IH(TXD)}$	Driver High-Level Input Voltage, VCC = 5 V	2.4		5.5	V
	Driver High-Level Input Voltage, VCC = 3.3 V	2		5.5	V
$V_{IL(TXD)}$	Driver Low-Level Input Voltage			0.8	V
T_A	Operating Ambient Temperature	−40		125	°C

Thermal Information

Package Type	θ_{JA}	θ_{JC}	Unit
SOP16	91	43	°C/W
SSOP16	103	45	°C/W
TSSOP16	115	48	°C/W

Electrical Characteristics

All test conditions: V_{CC} = 3.0 V to 3.6 V, 4.5 V to 5.5 V, C1 − C4 = 0.2 μF, T_A = −40°C to 125°C, unless otherwise noted.

Symbol	Parameter	Conditions	Min	Typ	Max	Unit
DC Characteristics						
I_{CC}	Supply Current	No load, V_{CC} = 3.3 V, TINx = GND or V_{CC}, T_A = 25°C		1.2	15	mA
Logic Inputs and Receiver Outputs						
V_{IL}	Input Voltage of Logic Low	TIN1, TIN2			0.8	V
V_{IH}	Input Voltage of Logic High	TIN1, TIN2, V_{CC} = 3.3 V	2			V
		TIN1, TIN2, V_{CC} = 5.0 V	2.4			V
I_{IL}	Input Leakage Current	TIN1, TIN2, V_{IN} = 0 V to V_{CC}, T_A = 25°C	−1		15	μA
I_{OL}	Output Leakage Current	ROUT1, ROUT2, V_{CC} = 3.3 V	−15		10	μA
V_{OL}	Output Voltage Low	I_{OUT} = −1.5 mA			0.3	V
V_{OH}	Output Voltage High	I_{OUT} = 1.5 mA	V_{CC} − 0.3			V
Driver Outputs						
V_{SWING}	Output Voltage Swing	R_L = 3 kΩ, TINx = GND	±5.0	±5.4		V
O_R	Output Resistance	V_{CC} = V+ = V− = 0 V, TOUTx = +2 V (1)	160	2.4 M		Ω
I_{OSC}	Output Short-Circuit Current	V_{OUT} = 0 V	−60		60	mA
Receiver Inputs						
V_{IL}	Input Threshold Low	V_{CC} = 3.3 V	0.6	1.30		V
		V_{CC} = 5.0 V	0.8	1.30		
V_{IH}	Input Threshold High	V_{CC} = 3.3 V		1.60	2.4	V
		V_{CC} = 5.0 V		1.60	2.4	
RX_{HYS}	Input Hysteresis	(1)		0.3		V
RX_R	Input Resistance	R_{IN} voltage = 5 V (1)	3	5	7	kΩ
Timing Characteristics						
f_{MAX}	Maximum Data Rate	R_L = 3 kΩ, C_L = 1000 pF, one driver switching (1)			250	kbps
t_{DPHL}	Driver Propagation Delay, High-to-Low Output	Driver input to receiver output, C_L = 150 pF		700	1000	ns
t_{DPLH}	Driver Propagation Delay, Low-to-High Output	Driver input to receiver output, C_L = 150 pF		500	700	ns
t_{SKEW}	Driver Skew	$\lvert t_{DPHL} - t_{DPLH} \rvert$		200	400	ns
TX_{SLEW}	Transition-Region Slew Rate	V_{CC} = 3.3 V, R_L = 3 kΩ, C_L = 1000 pF, T_A = 25°C (1)	6	10	30	V/μs

Symbol	Parameter	Conditions	Min	Typ	Max	Unit
t_{RPHL}	Receiver Propagation Delay, High-to-Low Output,	Receiver input to receiver output, C_L = 150 pF		180	300	ns
t_{RPLH}	Receiver Propagation Delay, Low-to-High Output	Receiver input to receiver output, C_L = 150 pF		210	400	ns
t_{SKEW}	Receiver Skew	$\lvert t_{RPHL} – t_{RPLH}\rvert$		30	100	ns

(1) Based on bench characterization and design simulation.
(2) I_{CC} = 3 mA with no load; and I_{CC} = 15 mA with maximum load, R_L = 3 kΩ, C_L = 1000 pF.

Parameter Measurement Information

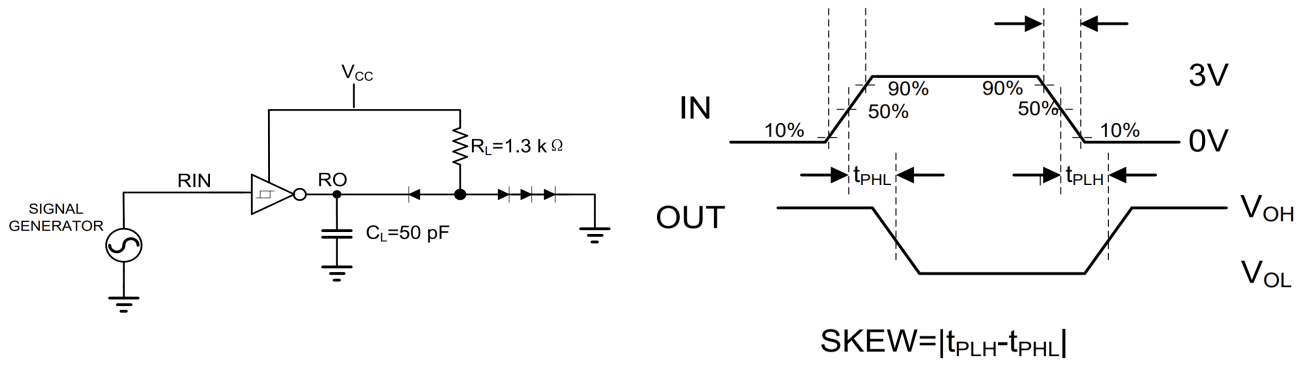

Figure 1. Receiver Propagation Delay and Receiver Skew

Detailed Description

Functional Block Diagram

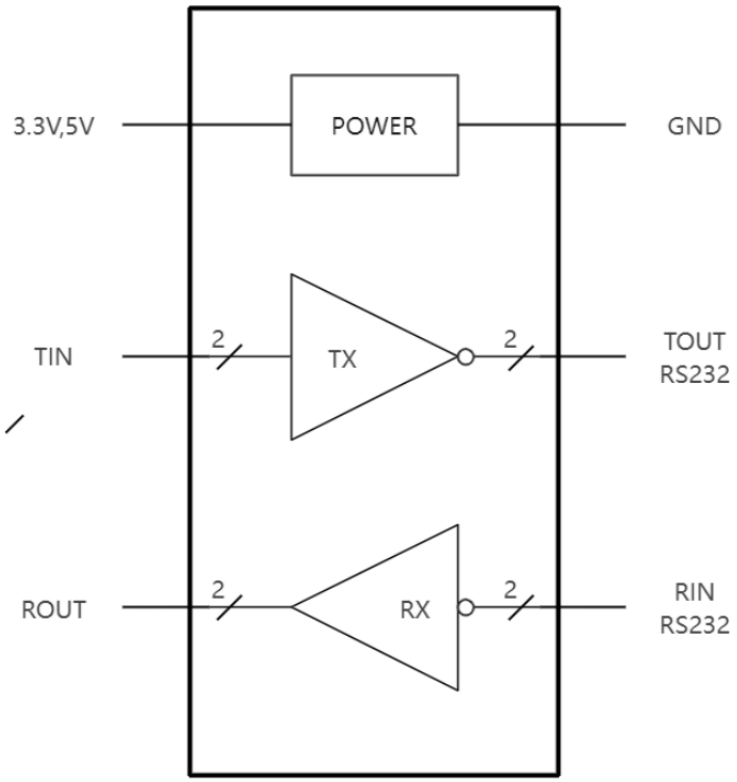

Figure 2. Functional Block Diagram

Application and Implementation

Note

Information in the following application sections is not part of the 3PEAK's component specification and 3PEAK does not warrant its accuracy or completeness. 3PEAK's customers are responsible for determining suitability of components for their purposes. Customers should validate and test their design implementation to confirm system functionality.

Typical Application

Figure 3 shows the typical application schematic.

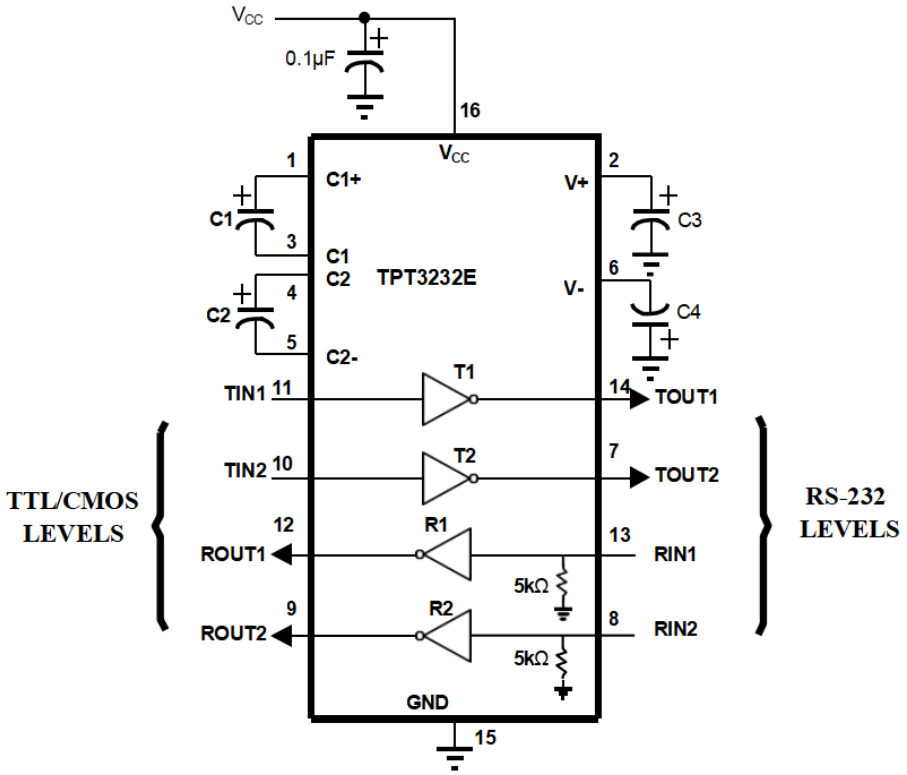

Figure 3. Typical Application Circuit

Non-polarized ceramic capacitors are acceptable. If polarized tantalum or electrolytic capacitors are used, they should be connected as shown in Figure 3. The recommended capacitor values of C1 to C4 are in Table 2. If the power supply is possibly connected to 3.3 V or 5.5 V, all capacitors of 0.2 μF are suggested in the application.

Table 2. Required Minimum Capacitor Values

V_{CC} (V)	C1 (μF)	C2, C3, C4 (μF)
3.0 to 3.6	0.2	0.1
4.5 to 5.5	0.1	0.1
3.0 to 5.5	0.2	0.2

Tape and Reel Information

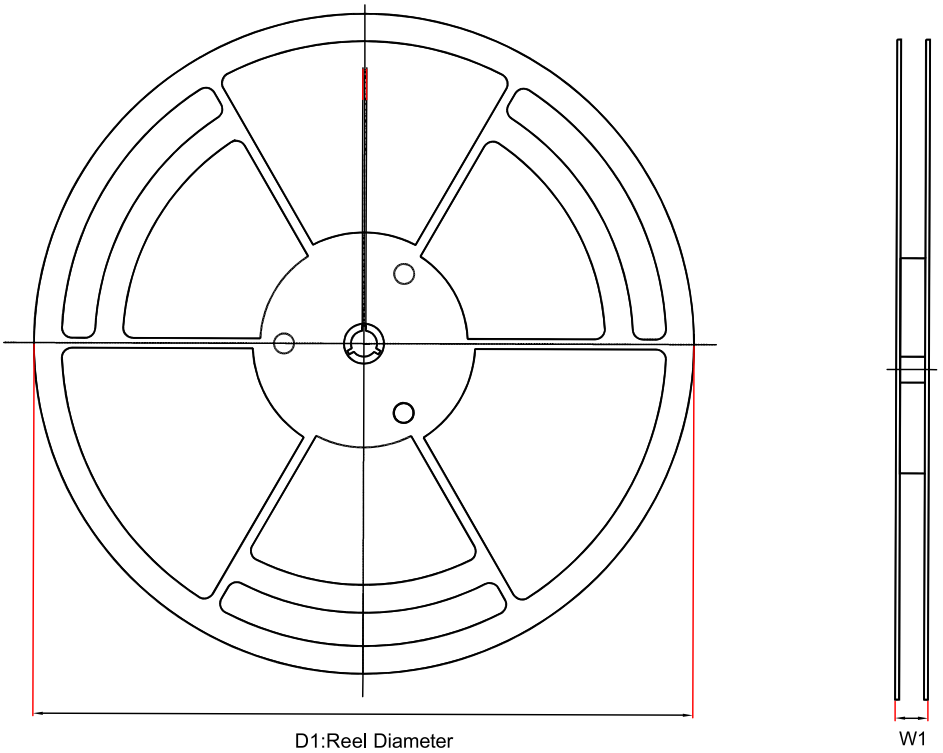

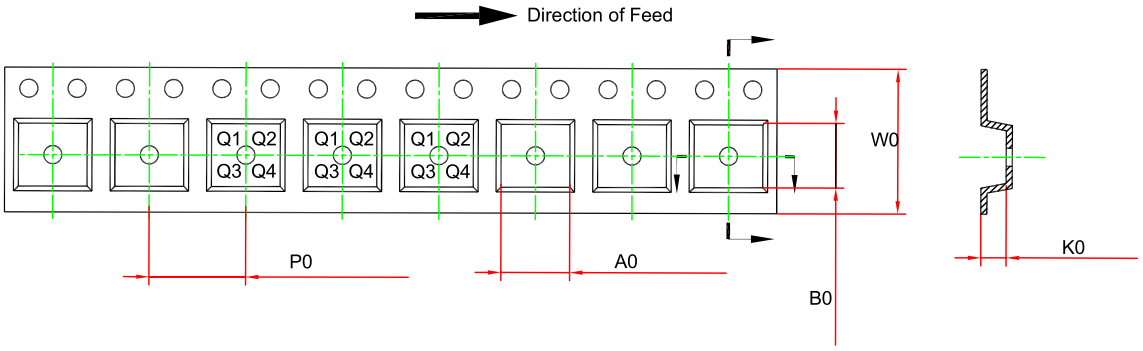

Order Number	Package	D1 (mm)	W1 (mm)	A0 (mm) (1)	B0 (mm) (1)	K0 (mm) (1)	P0 (mm)	W0 (mm)	Pin1 Quadrant
TPT3232E-SO3R	SOP16	330	21.6	6.7	10.4	2.1	8.0	16.0	Q1
TPT3232E-SS3R	SSOP16	330	21.6	8.5	6.8	2.37	12.0	16.0	Q1
TPT3232E-TS3R	TSSOP16	330	17.6	6.8	5.5	1.3	8.0	12.0	Q1

(1) The value is for reference only. Contact the 3PEAK factory for more information.

Package Outline Dimensions

SOP16

Package Outline Dimensions SO3(SOP-16-A)

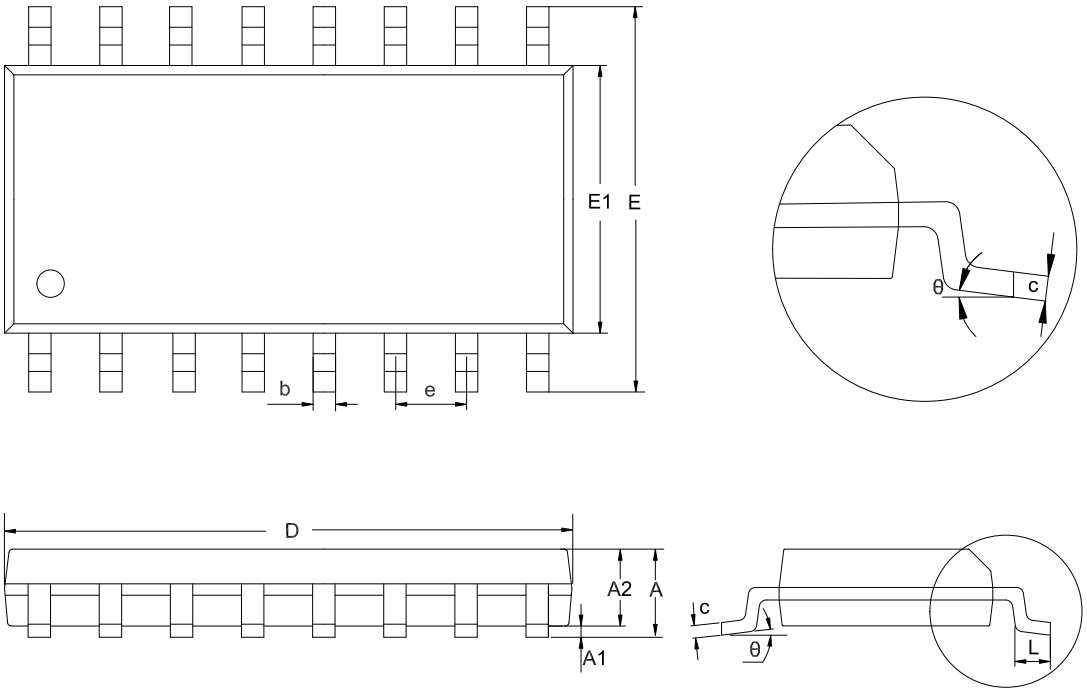

Symbol	Dimensions In Millimeters		Dimensions In Inches	
	MIN	MAX	MIN	MAX
A	1.350	1.750	0.053	0.069
A1	0.050	0.250	0.002	0.010
A2	1.300	1.600	0.051	0.063
b	0.330	0.510	0.013	0.020
c	0.170	0.250	0.007	0.010
D	9.800	10.000	0.386	0.394
E	5.800	6.200	0.228	0.244
E1	3.800	4.000	0.150	0.157
e	1.270 BSC		0.050 BSC	
L	0.400	1.000	0.016	0.039
θ	0	8°	0	8°

NOTES

1. Do not include mold flash or protrusion.
2. This drawing is subject to change without notice.

SSOP16

Package Outline Dimensions SS3(SSOP-16-A)

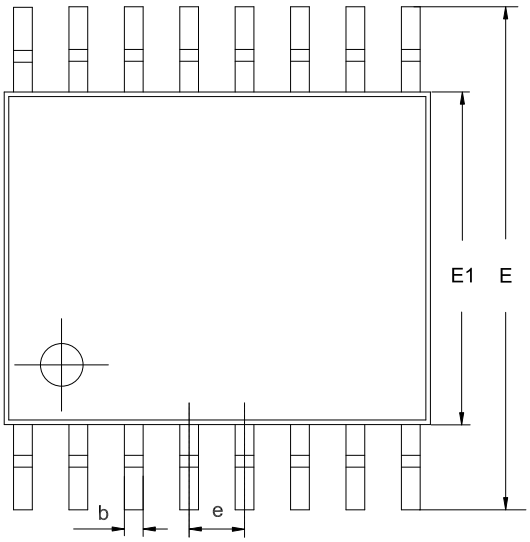

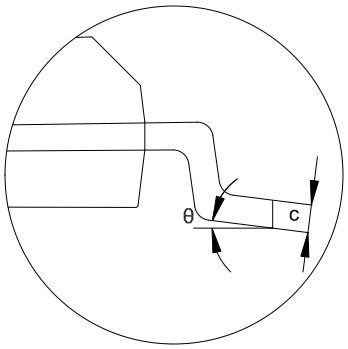

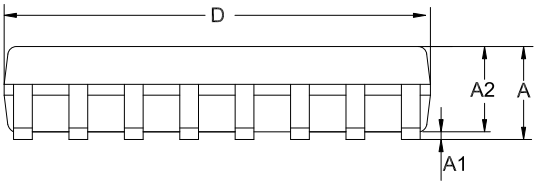

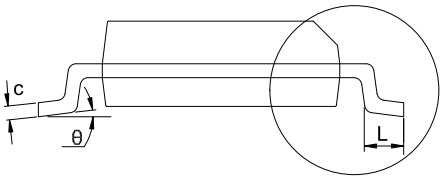

Symbol	Dimensions In Millimeters		Dimensions In Inches	
	MIN	MAX	MIN	MAX
A	1.500	2.000	0.059	0.079
A1	0.050	0.250	0.002	0.010
A2	1.400	1.850	0.055	0.073
b	0.220	0.380	0.009	0.015
c	0.090	0.250	0.004	0.010
D	5.900	6.500	0.232	0.256
E	7.400	8.200	0.291	0.323
E1	5.000	5.600	0.197	0.220
e	0.650 BSC		0.026 BSC	
L	0.550	1.050	0.022	0.041
θ	0	8°	0	8°

NOTES

1. Do not include mold flash or protrusion.
2. This drawing is subject to change without notice.

TSSOP16

Package Outline Dimensions TS3(TSSOP-16-A)

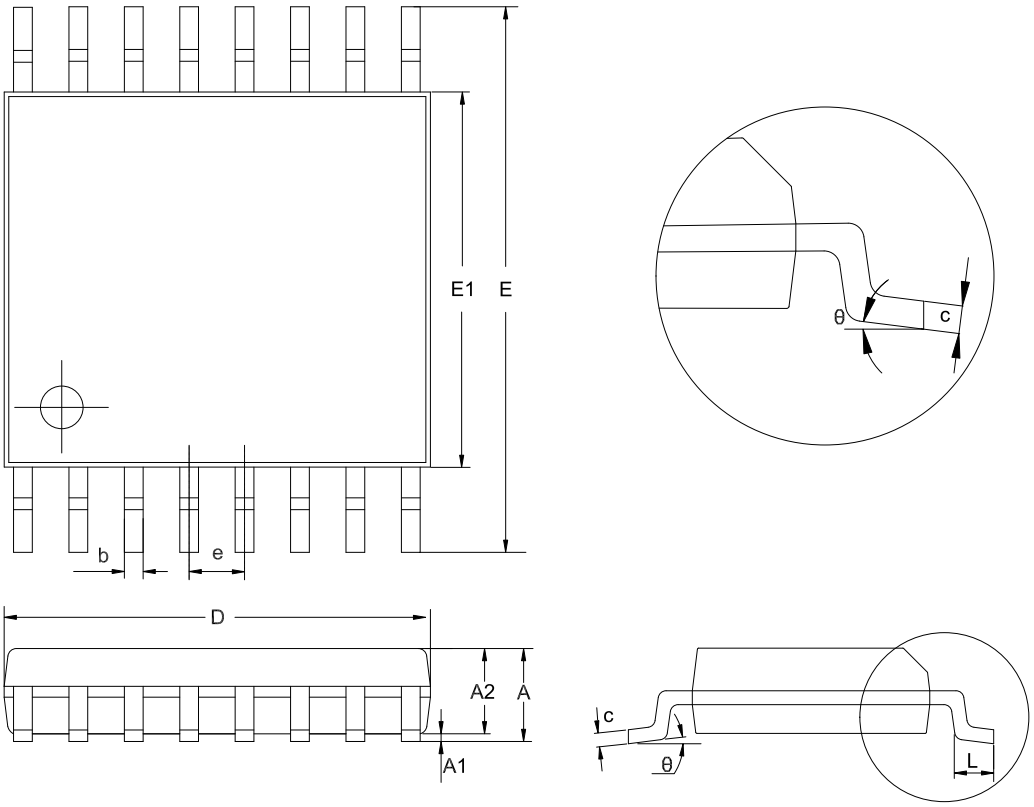

Symbol	Dimensions In Millimeters		Dimensions In Inches	
	MIN	MAX	MIN	MAX
A	0.900	1.200	0.035	0.047
A1	0.050	0.150	0.002	0.006
A2	0.800	1.050	0.031	0.041
b	0.190	0.300	0.007	0.012
c	0.090	0.200	0.004	0.008
D	4.900	5.100	0.193	0.201
E	6.200	6.600	0.244	0.260
E1	4.300	4.500	0.169	0.177
e	0.650 BSC		0.026 BSC	
L	0.450	0.750	0.018	0.030
θ	0	8°	0	8°

NOTES

1. Do not include mold flash or protrusion.
2. This drawing is subject to change without notice.

Order Information

Order Number	Operating Temperature Range	Package	Marking Information	MSL	Transport Media, Quantity	Eco Plan
TPT3232E-SO3R	−40 to 125°C	SOP16	3232E	3	Tape and Reel, 2500	Green
TPT3232E-SS3R	−40 to 125°C	SSOP16	3232E	3	Tape and Reel, 2000	Green
TPT3232E-TS3R	−40 to 125°C	TSSOP16	3232E	3	Tape and Reel, 3000	Green

Green: 3PEAK defines "Green" to mean RoHS compatible and free of halogen substances.

IMPORTANT NOTICE AND DISCLAIMER

Copyright© 3PEAK 2012-2026. All rights reserved.

Trademarks. Any of the 思瑞浦 or 3PEAK trade names, trademarks, graphic marks, and domain names contained in this document /material are the property of 3PEAK. You may NOT reproduce, modify, publish, transmit or distribute any Trademark without the prior written consent of 3PEAK.

Performance Information. Performance tests or performance range contained in this document/material are either results of design simulation or actual tests conducted under designated testing environment. Any variation in testing environment or simulation environment, including but not limited to testing method, testing process or testing temperature, may affect actual performance of the product.

Disclaimer. 3PEAK provides technical and reliability data (including data sheets), design resources (including reference designs), application or other design recommendations, networking tools, security information and other resources "As Is". 3PEAK makes no warranty as to the absence of defects, and makes no warranties of any kind, express or implied, including without limitation, implied warranties as to merchantability, fitness for a particular purpose or non-infringement of any third-party's intellectual property rights. Unless otherwise specified in writing, products supplied by 3PEAK are not designed to be used in any life-threatening scenarios, including critical medical applications, automotive safety-critical systems, aviation, aerospace, or any situations where failure could result in bodily harm, loss of life, or significant property damage. 3PEAK disclaims all liability for any such unauthorized use.