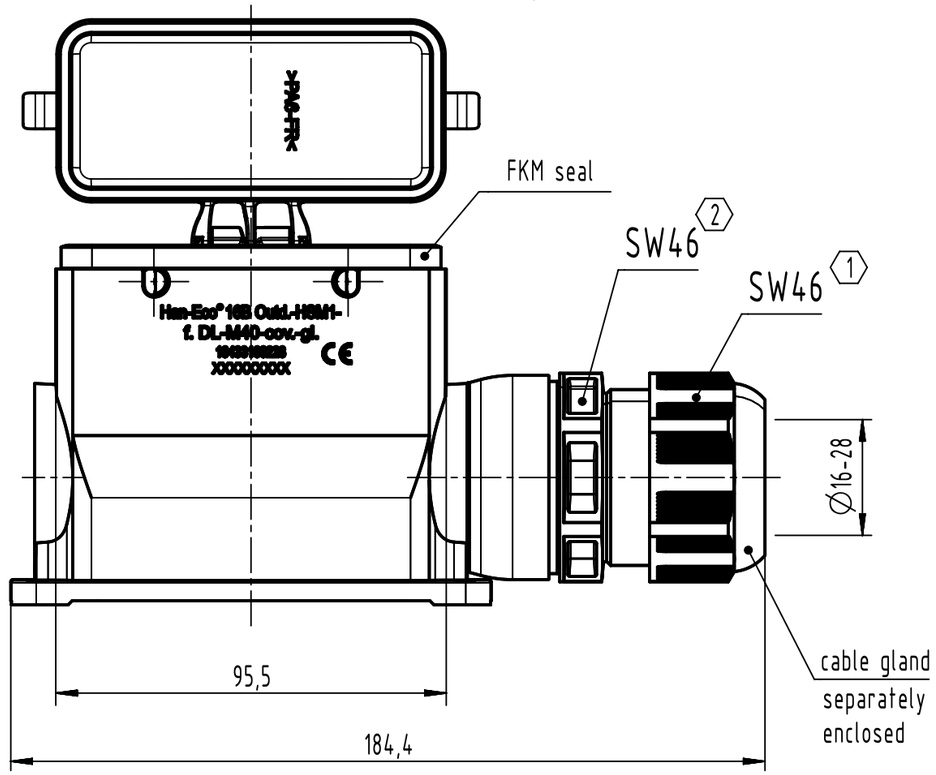

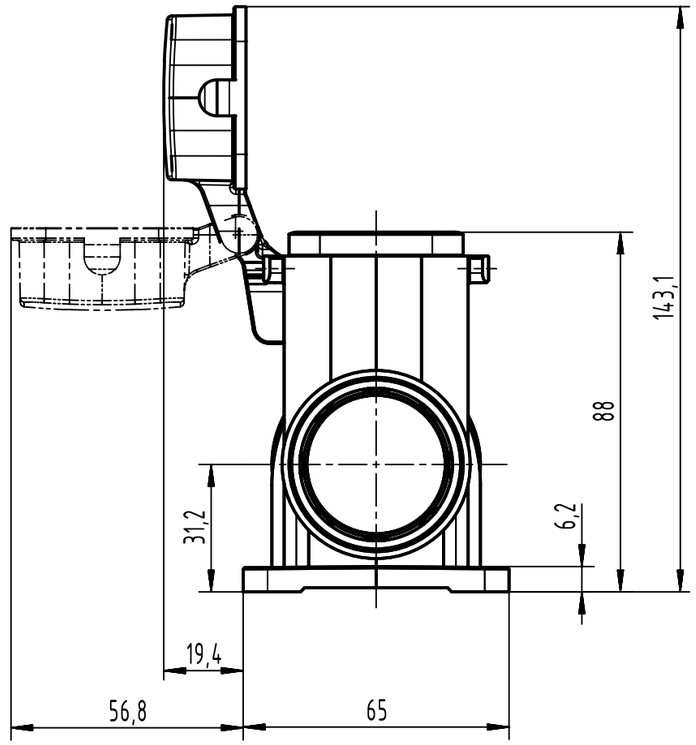

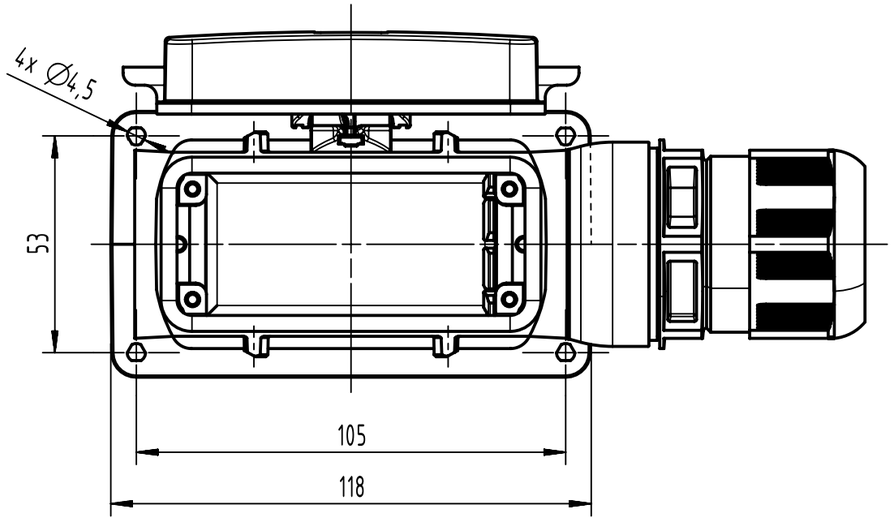

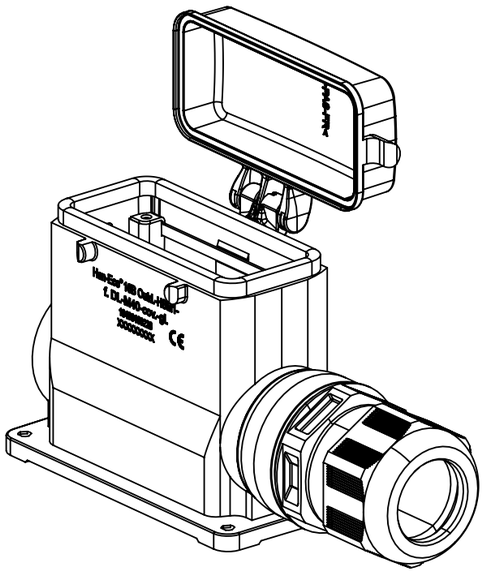

(2) tightening torque 20Nm

(1) tightening torque 20Nm

All Dimensions in mm Original Size DIN A3	Scale 1:1.5	Free size tol.		Ref. Sub.	
All rights reserved	Created by HELLMANN	Inspected by HERBRECHTSME	Standardisation	Date 2022-12-05	State Final Release
Department EL PD	Title Han-Eco 16B Outd.-HSM1-f. DL-M40-cov.-gl				Doc-Key / ECM-Nr. 100740047/UGD/002/A 500000227950
HARTING D-32339 Espelkamp	Type TB	Number 19 43 316 0228		Rev. A	Page 1/1

A3