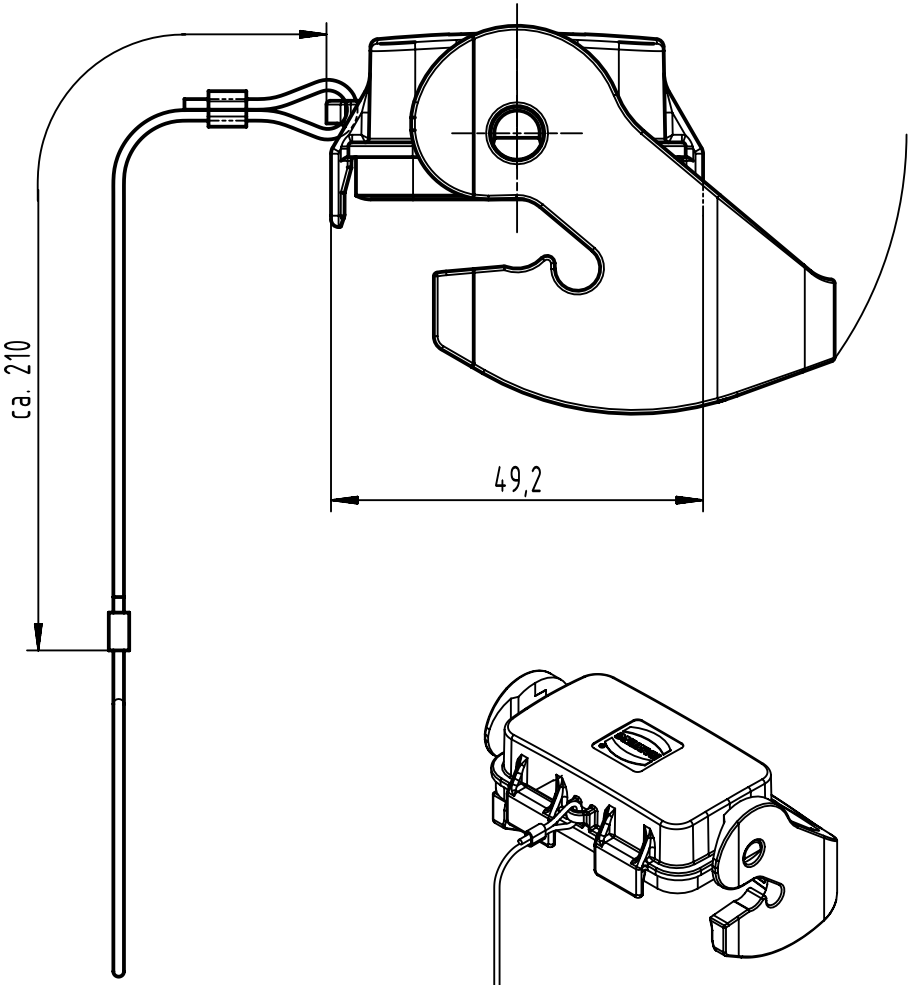

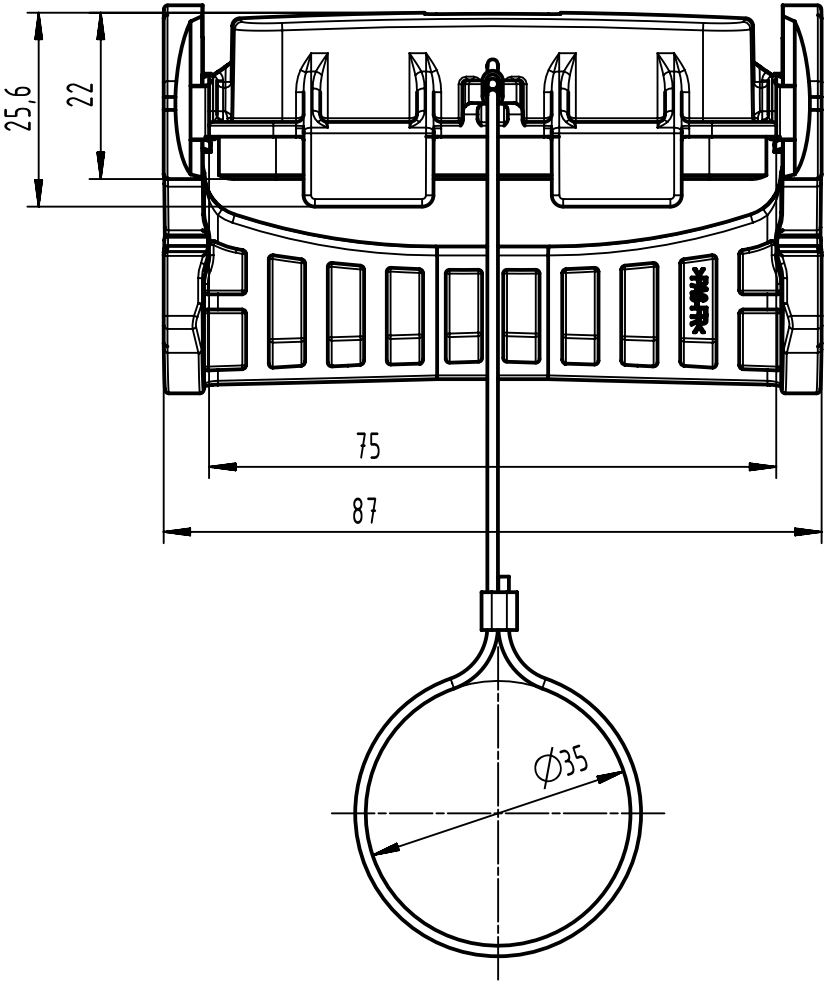

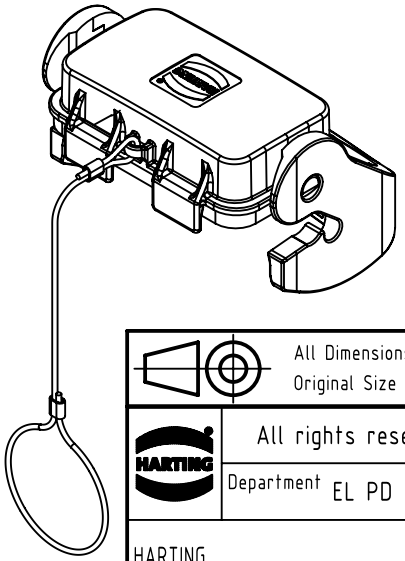

All Dimensions in mm Original Size DIN A4	Scale 1:1	Free size tol.		Ref. Sub.	
All rights reserved Department EL PD	Created by HELLMANN	Inspected by HERBRECHTSME	Standardisation	Date 2022-12-01	State Final Release
HARTING D-32339 Espelkamp	Title Han-Eco 10B-Outd-Cov-w.SL-w.cord-HTE/HSE				Doc-Key / ECM-Nr. 101005167/UGD/001/A 500000228202
	Type TB	Number 19 43 210 5442		Rev. A	Page 1/1

A4