REVISIONS					
REV	ECO	DESCRIPTION	DATE	BY	APPR
A1	--	RELEASE NEW DRAWING	01/MAR/22	IAN	TOMMY

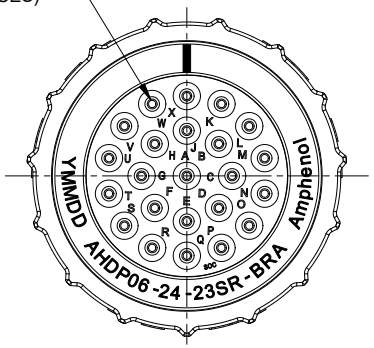

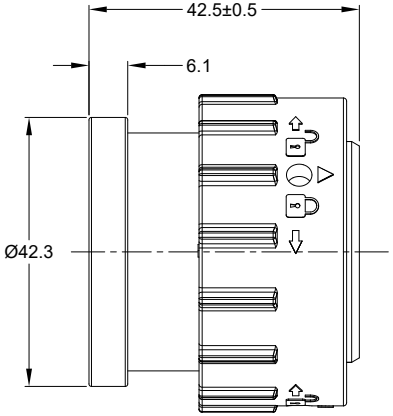

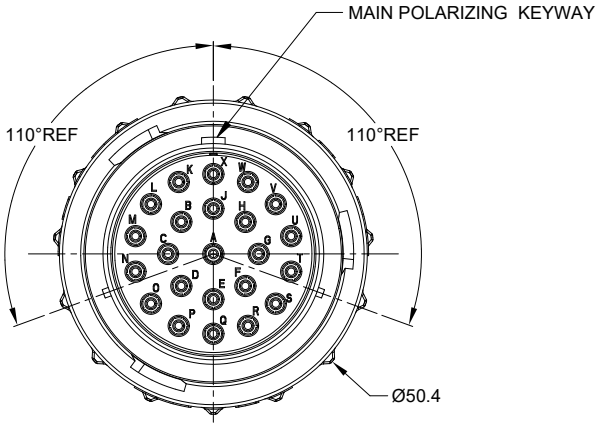

NOTES: UNLESS OTHERWISE SPECIFIED

1. MATERIAL:
   HOUSING: THERMOPLASTIC; BLACK
   SEAL: SILICONE RUBBER

2. MODIFICATIONS: BACKSHELL RING ADAPTER (BRA);
   REDUCED DIA. WIRE SEAL;

3. SPECIFICATIONS:
   3.1 OPERATING TEMPERATURE: -55°C TO +125°C.
   3.2 DIELECTRIC WITHSTANDING VOLTAGE: LESS THAN 2 MILLIAMPS CURRENT LEAKAGE @ 1500 VOLTS AC.
   3.3 INSULATION RESISTANCE: 1000 MEGOHM MIN @ 25°C.
   3.4 MOISTURE RESISTANCE:
   IP68(IM OF WATER FOR A PERIOD OF 24 HOURS, MATED CONDITION);
   IP69K(MATED CONDITION)
   3.5 MATING CYCLE DURABILITY: 100 CYCLES
   3.6 RoHS COMPLIANT

4. MATING PART: AHDP02-24-23P* & AHDP04-24-23P* (* = SEAL TYPE)

5. ALL DIMENSIONS ARE FOR REFERENCE USE ONLY.

6 CONTACT SIZE AND WIRE RANGE:

CONTACT SIZE	MIN. INSUL O.D.	MAX. INSUL O.D.	TYPICAL WIRE RANGE	CURRENT RATING
16	1.35 mm (.053in)	3.05 mm (.120 in)	14-20 AWG (2.0-0.5mm^2)	13 AMPS

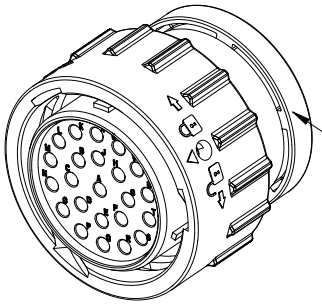

	AHDP06-24-23SR-BRA	REF : HDP26-24-23SE-L017	
QUANTITY	PART NUMBER	DESCRIPTION	ITEM

MATERIALS LIST

UNLESS OTHERWISE SPECIFIED
1) All dimensions are in metric(mm).
2) Tolerances are as follows:
1 PL DEC ±0.30
2 PL DEC ±0.15
3 PL DEC ±0.08
Fractions ±1/64
Angles ±1°
3) Note reference = X

MATERIAL SPECIFICATIONS:
WEIGHT: 61g

PROCESS SPECIFICATIONS:

NEXT ASS'Y:

SIGNATURES		DATE
DRAWN:	IAN.XIAO	01/MAR/22
CHECKED:	SULLEN.ZHANG	02/MAR/22
ENGINEER:		
APPROVAL:	TOMMY.XIE	03/MAR/22
CUSTOMER:		

THIS DRAWING IS SUPPLIED FOR INFORMATION ONLY. DESIGN FEATURES, SPECIFICATIONS AND PERFORMANCE DATA SHOWN HEREON ARE THE PROPERTY OF THE AMPHENOL CORPORATION. NO RIGHTS OF REPRODUCTION ARE IMPLIED. ALL DIMENSIONS ARE SUBJECT TO NORMAL MANUFACTURING VARIATIONS.

Amphenol

Sine Systems - www.amphenol-sine.com
44724 Morley Drive
Clinton Township, MI 48036

23POS, PLUG, SOCKET, SIZE 24, RD SEAL, BRA, DURAMATE AHDP

SIZE	TYPE	DWG NO:	REVISION
B	C-	AHDP06-24-23SR-BRA	A1

SCALE: NONE | DURAMATE | SHEET 1 OF 1

TITLE: 23POS, PLUG, SOCKET, SIZE 24, RD SEAL, BRA, DURAMATE AHDP
DWG NO: AHDP06-24-23SR-BRA
REV: A1
SH: 1
OF: 1

A Series™ - Contact Size 16 Options (Works with: AT, ATV, AHD-9, ARC, DuraMate and PanelMate Series)

Machined Contacts, Sockets & Pins				
Part Number	**Description**	**Size**	**AWG**	**Type**
AT60-215-1631	Male Contact - Pin, Gold-plated	16	14	Machined
AT62-209-1631	Female Contact - Socket, Gold-plated	16	14	Machined
AT60-215-16141	Male Contact - Pin, Nickel-plated	16	14	Machined
AT62-209-16141	Female Contact - Socket, Nickel-plated	16	14	Machined
AT60-202-1631	Male Contact - Pin, Gold-plated	16	16-20	Machined
AT62-201-1631	Female Contact - Socket, Gold-plated	16	16-20	Machined
AT60-202-16141	Male Contact - Pin, Nickel-plated	16	16-20	Machined
AT62-201-16141	Female Contact - Socket, Nickel-plated	16	16-20	Machined
AT60-202-1631-22	Male Contact - Pin, Gold-plated	16	22-24	Machined
AT62-201-1631-22	Female Contact - Socket, Gold-plated	16	22-24	Machined
AT60-202-16141-22	Male Contact - Pin, Nickel-plated	16	22-24	Machined
AT62-201-16141-22	Female Contact - Socket, Nickel-plated	16	22-24	Machined

Tooling - Machined Contacts	
Part Number	**Description**
AUTK-16	Hand Crimp Tool, Size 16
AUTK-100	Universal Heavy Duty Contact Crimping Tool Kit, Size 12/16/20
CA-5D12	Universal Hand Crimp Tool, Size 12/16/20
CA-5E12	Pneumatic Crimp Tool, Size 12/16/20

Contact Removal Tools (For both Machined or Stamped & Formed Contacts)	
Part Number	**Description**
ATRT-100	Contact and Wedgelock Extraction Tool
AT11-310-1605	Contact Removal Tool, Plastic, Size 16

Sealing Plugs (For both Machined or Stamped & Formed Contacts)	
Part Number	**Description**
A114017	Sealing Plug, Size 16, White
A114017-SR	Sealing Plug, Size 16, SR01 Series, Black
AT13-217-1605	Locking Sealing Plug, Size 16, Grey
AT13-217-1605-SR	Locking Sealing Plug, Size 16, SR01 Series, Red

Stamped & Formed Contacts, Sockets & Pins				
Part Number	**Description**	**Size**	**AWG**	**Type**
AT60-14-0122	Male Contact - Pin, Nickel-plated	16	14-18	Stamped & Formed
AT62-14-0122	Female Contact - Socket, Nickel-plated	16	14-18	Stamped & Formed
AT60-14-0144	Male Contact - Pin, Gold-plated	16	14-18	Stamped & Formed
AT62-14-0144	Female Contact - Socket, Gold-plated	16	14-18	Stamped & Formed
AT60-16-0122	Male Contact - Pin, Nickel-plated	16	16-18	Stamped & Formed
AT62-16-0122	Female Contact - Socket, Nickel-plated	16	16-18	Stamped & Formed
AT60-16-0144	Male Contact - Pin, Gold-plated	16	16-18	Stamped & Formed
AT62-16-0144	Female Contact - Socket, Gold-plated	16	16-18	Stamped & Formed
AT60-16-0622	Male Contact - Pin, Nickel-plated	16	16-20	Stamped & Formed
AT62-16-0622	Female Contact - Socket, Nickel-plated	16	16-20	Stamped & Formed
AT60-16-0644	Male Contact - Pin, Gold-plated	16	16-20	Stamped & Formed
AT62-16-0644	Female Contact - Socket, Gold-plated	16	16-20	Stamped & Formed
AT60-16-0677	Male Contact - Pin, Tin-plated	16	16-20	Stamped & Formed
AT62-16-0677	Female Contact - Socket, Tin-plated	16	16-20	Stamped & Formed
AT60-16-0822	Male Contact - Pin, Nickel-plated	16	20-22	Stamped & Formed
AT62-16-0822	Female Contact - Socket, Nickel-plated	16	20-22	Stamped & Formed
AT60-16-0844	Male Contact - Pin, Gold-plated	16	20-22	Stamped & Formed
AT62-16-0844	Female Contact - Socket, Gold-plated	16	20-22	Stamped & Formed

Tooling - Stamped & Formed Contacts	
MFX-3950	Crimp Die - Size 16, 18-20AWG
MFX-3953	Crimp Die - Size 16, 16-18AWG
MFX-3975	Crimp Die - Size 16, 14-16AWG
MFX-3990	Crimp Die - Size 16, 20-22AWG
ATT-16-00	Hand Crimp Tool - Size 16, 14-16AWG
ATT-16-01	Hand Crimp Tool - Size 16, 18-20AWG
ATT-1612-03	Hand Crimp Tool - Size 16, 20-22AWG