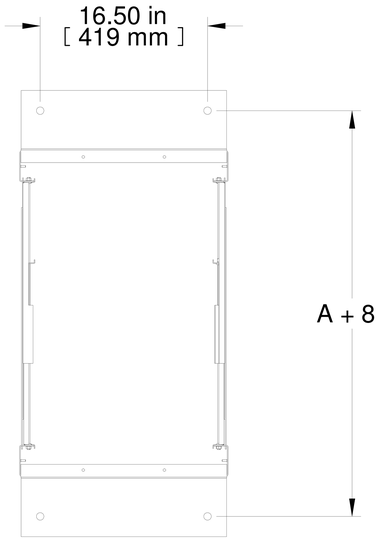

TOP VIEW

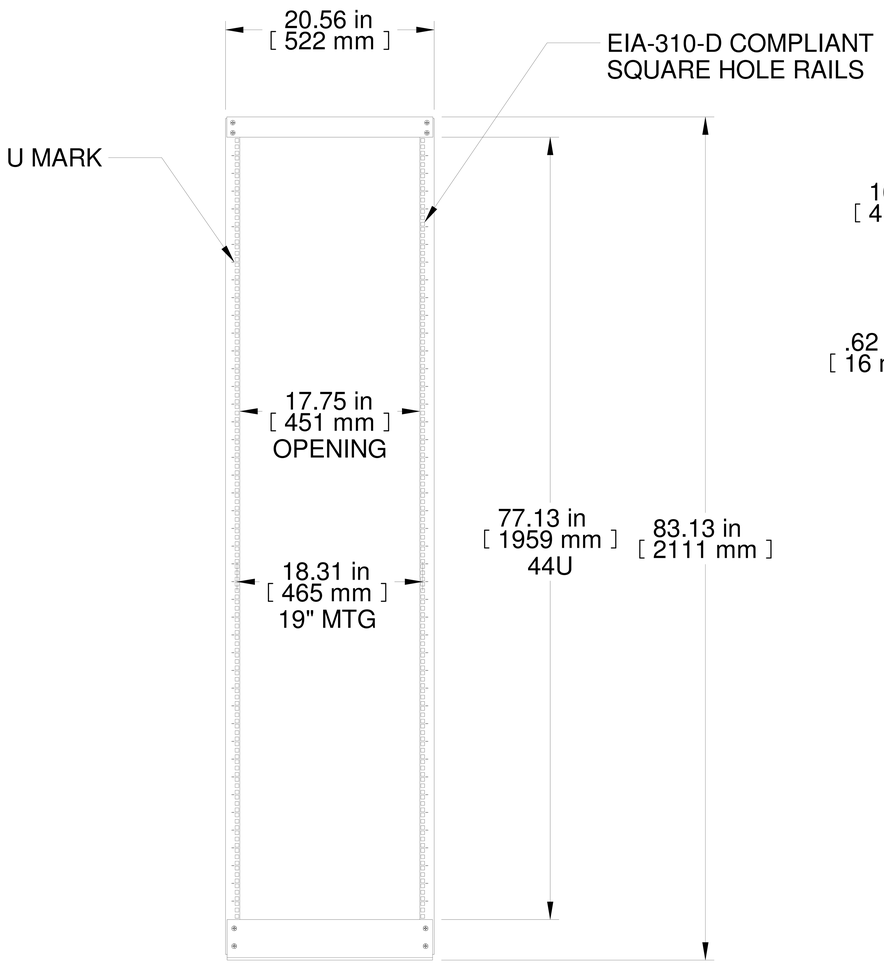

FRONT VIEW

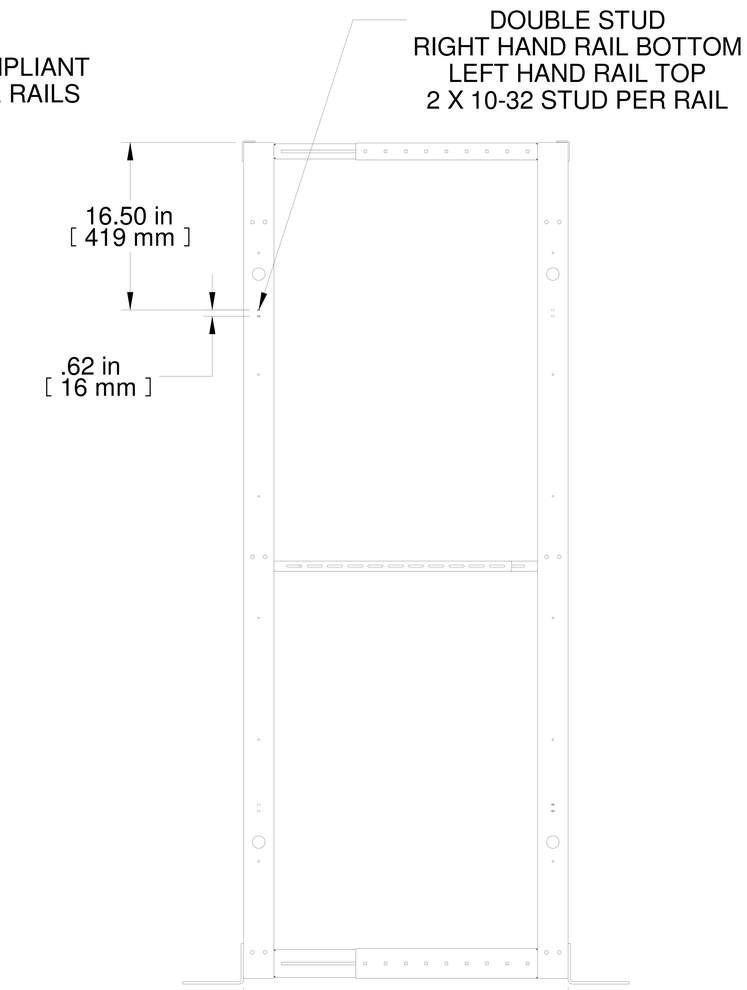

R.S. VIEW

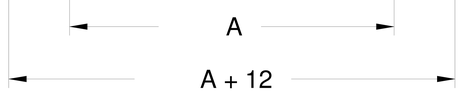

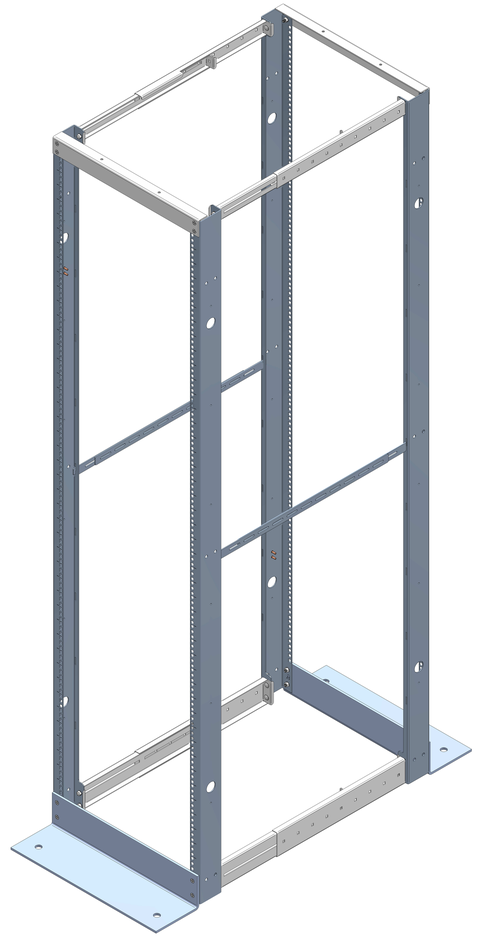

ISOMETRIC
FEET OUT
(EXTENDED)

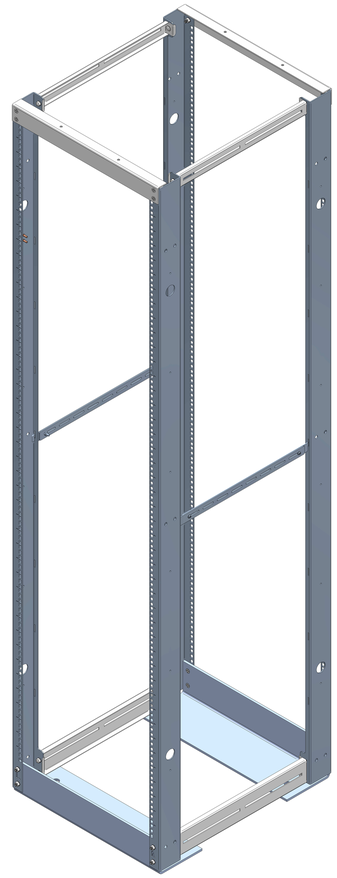

ISOMETRIC
FEET IN

PART NO.	A (DEPTH)
DC4R44	24" - 36"

NOTE: DIM "A" (DEPTH) IS FULLY ADJUSTABLE

PART NUMBERS	
DC4R44	PAINTED BLACK THIN FILM

NOTES

Shipped Knockdown for Handling and Protection
Self-Centering Hardware Included for Ease of Assembly
Ships with 50 Pack of Cage Nuts and Screws
See Hammond Website for More Information

Français

Pour tous les détails sur nos produits,
svp veuillez consulter notre site www.hammondmfg.com

Data subject to change without notice. Isometric drawing not to scale.
Les données sont sujettes à changement sans préavis.

RoHS

HAMMOND MANUFACTURING®

www.hammondmfg.com

PART NO. DC4R44