HAMMOND®

Quality Products. Service Excellence.

Mounting Rack Rail Swing Frame *S2CSWF Series*

For use with the Series 2000 Enclosures

- Available in 19" and 24" widths.
- Variable depth feature allows front to rear adjustment.
- Installs with either left or right hinging.
- Mounts onto Rail Support Kits (not included).
- Clip nuts required for mounting to punched rails.
- Finished in textured black.
- TAA compliant for GSA Schedule purchases.
- RoHS Compliant.
- Manufactured in North America.

Gallery

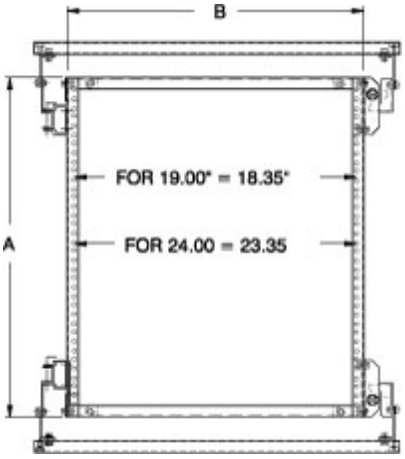

Part No.	Fits Console Unit	Fits Console Size	Panel Width	Panel Height	A	B
2CSFT19	Turrets/Terminal	24,36,48,60	19"	8U	15.75	19.28
2CSFT24	Turrets/Terminal	36,48,60	24"	8U	15.75	24.28
2CSFB19	Bases	24,36,48,60	19"	12U	22.09	19.28
2CSFB24	Bases	36,48,60	24"	12U	22.09	24.28

Tags: **Series 2000**, **rackmount**, **19 inch**, **24 inch. turret**, **terminal**, **desk**, **swing frame**, **rail**

Data subject to change without notice

© 2024. Hammond Manufacturing Ltd. All rights reserved.