THE INFORMATION CONTAINED IN THIS DRAWING IS THE SOLE PROPERTY OF ANDERSON POWER PRODUCTS. ANY REPRODUCTION IN PART OR WHOLE WITHOUT THE WRITTEN PERMISSION OF ANDERSON POWER PRODUCTS IS PROHIBITED.

Copyright 2022

ANDERSON POWER PRODUCTS RESERVES THE RIGHT TO ALTER PRODUCT TYPES, THEIR TECHNICAL DATA, DIMENSION, STYLE AND ACCESSORIES WITHOUT PRIOR NOTIFICATION.

KIT PART NUMBER				KITS DESCRIPTION
SBSX75A-PMPLUG-KIT-RED	*SBSX75A-PMPLUG-KIT-BLU*	*SBSX75A-PMPLUG-KIT-GRA*	*SBSX75A-PMPLUG-KIT-BLK*	CONNECTOR KITS CONTAINING THE CONNECTOR ASSEMBLY, SIGNAL HOLDER, PANEL GASKET AND O-RINGS FOR MOUNTING HARDWARE. KIT PART NUMBER IS UNIQUE TO THE COLOR OF THE SIGNAL HOUSING.

ITEM NUMBER	COMPONENT PART NUMBER				MATERIAL	PART DESCRIPTION	QTY
1	SBSX75A-PMPLUG-BLK				PC/PBT	PANEL MOUNT PLUG HOUSING	1
2	2-8840P1	2-8840P2	2-8840P3	2-8840P4	PC	SIGNAL CONTACT HOUSING	1
COLOR	(RED)	(BLUE)	(GRAY)	(BLACK)	-	-	-
3	115233P14				SILICONE	HARDWARE O-RINGS	4
4	116008P1				NBR	PANEL MOUNT GASKET	1

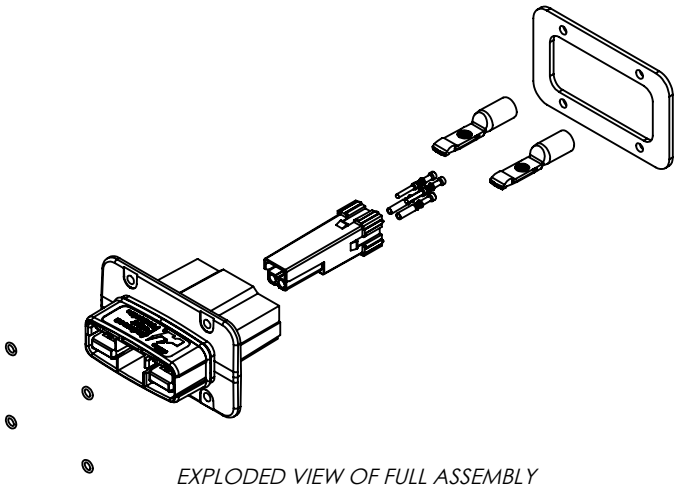

EXPLODED VIEW OF FULL ASSEMBLY
SCALE 1:3

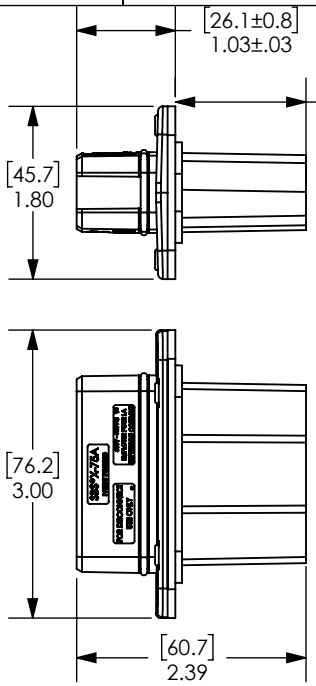

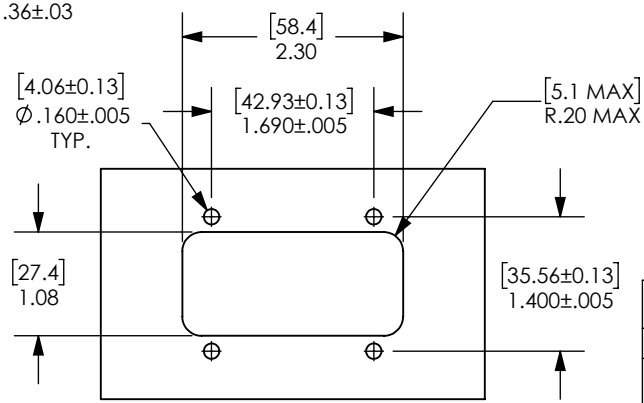

RECOMMENDED PANEL MOUNT CUTOUT

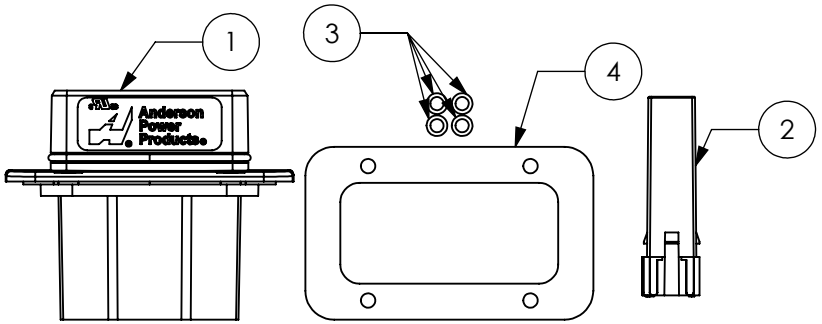

NOTES:
1. ALL CONTACTS ARE SOLD SEPARATELY.
2. RECOMMENDED HARDWARE FOR MOUNTING TO BE WITHOUT TAPERED HEAD.

REV.	DESCRIPTION	APPRV	DATE
REVISIONS			

DIMENSIONS ARE IN: INCH [MM]
UNLESS OTHERWISE STATED

TOLERANCES:

DECIMALS (INCH)	DECIMALS (MM)	ANGLES
.XX ± .02	.X ± .5	±2°

SURFACE FINISH:
MACHINED 128µin [3.2µ]
MOLDED 64µin [1.6µ]

MATERIAL: SEE TABLE

FINISH:

3rd ANGLE PROJECTION

APPROVALS

DRAWN	JWH	2/1/2022
CHECKED	CMS	3/11/2022
PM APPRV	CM	3/22/2022
QC APPRV	UFN	3/25/2022
ENG APPRV	SH	3/11/2022

-CAD GENERATED DRAWING-
DO NOT MANUALLY UPDATE
DO NOT SCALE

ANDERSON POWER PRODUCTS

TITLE: SEALED SBS®X - 75A PLUG PANEL MOUNT CONNECTOR

COA	PROD. LINE	
3332	SBS®X-75A	
SIZE: A	DWG NO.: 115991S1	REV.: 0
SCALE: NONE	CADFILE: 05478	SHEET: 1 OF 1