GEC PLESSEY
SEMICONDUCTORS

JANUARY 1994
ADVANCE INFORMATION

D.S. 3802 1.3

SL5067

MULTI – STANDARD VIDEO MODULATOR

The SL5067 is a video up converter, capable of operating at frequencies up to 900MHz. It is compatible with both PAL and NTSC, accepting baseband video and sound inputs and modulating up to any desired VHF or UHF channel.

Modulated UHF outputs consist of open collectors driving external 75Ω load resistors for line matching requirements. Prescaler outputs are also provided enabling the use of a synthesiser to control oscillator frequency. The SL5067 operates from a 5V supply.

FEATURES

- 5V Operation
- Symmetrical RF Oscillator Operating to 900MHz
- Symmetrical RF drive to a frequency synthesiser
- Video Signal Input Clamp
- Video Peak White Level Detection and Automatic Gain Control
- Control of Video Modulation Index
- Direct Drive into 75Ω, via Symmetrical open Collector Outputs
- ESD Protection †
- Picture Carrier to Sound Carrier Ratio Adjustment
- Low External Component Count

† ESD Precautions must be observed

APPLICATIONS

- Video Recorders
- Cable Systems
- Video Cameras
- Personal Computers
- Video Security Systems
- In Home Rebroadcast System (LPTV)

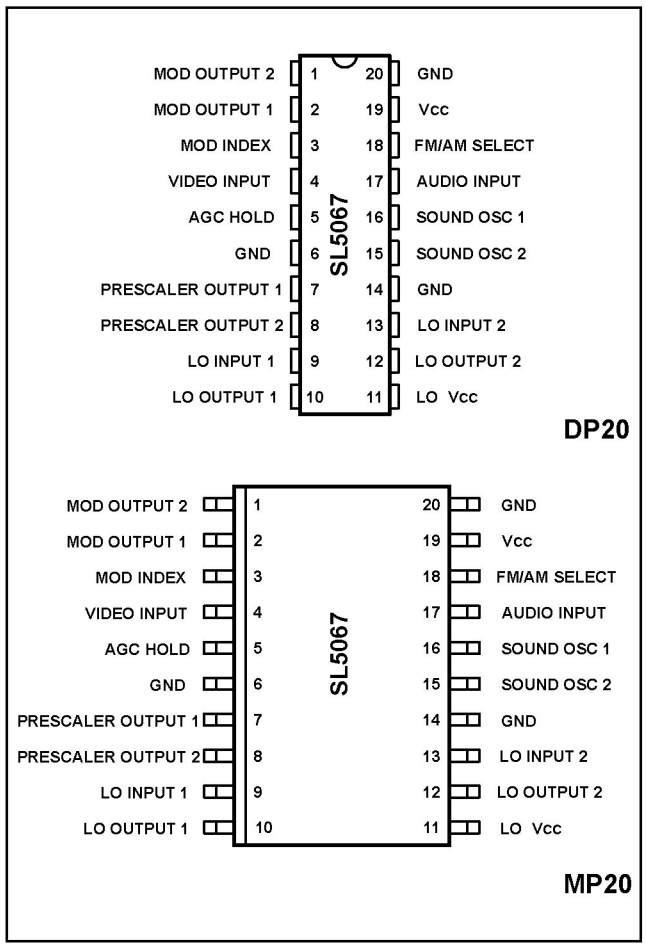

Fig. 1 Pin connections – top view

ORDERING INFORMATION

SL5067 /KG/DPAS
SL5067 KG/MPES
SL5067/KG/MPEF (Tape and Reel)

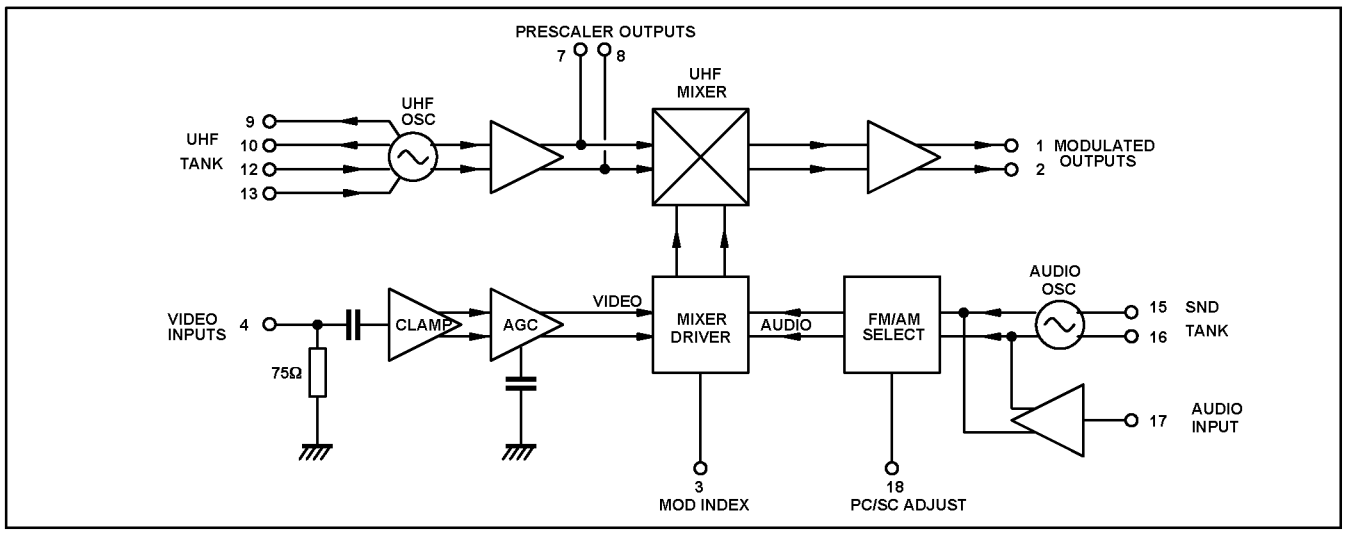

Fig. 2 SL5067 block diagram

ELECTRICAL CHARACTERISTICS

T_{amb}= –10°C to +80°C, V_{CC}=+4.5V to +5.5V. These characteristics are guaranteed over the following conditions (unless otherwise stated). They apply within the specified ambient temperature and supply voltage ranges.

Characteristics	Pin	Value			Units	Conditions
		Min	Typ	Max		
Supply Voltage	11, 19	4.5		5.5	V	
Supply Current	11, 19		52		mA	V_{CC}=5V
LO Prescaler Output Level	7, 8		10		mV RMS	Single ended into 50Ω
LO Prescaler Output Impedance	7, 8		50		Ω	
LO drift with temp from switch on	10, 12		70		kHz	See note 1
LO variation with supply	10, 12		330		kHz	See note 1, V_{CC} = 4.5 to 5.5 V
RF carrier output level	1,2		84		dBμV	unmodulated into 50Ω
Video Input	4	0.5	1.0	1.5	Vp–p	
Video mod index	1, 2	70	80		%	See note 2
Video Signal/Noise Ratio	1, 2		59		dB	Weighted PAL 200kHz – 5.5MHz
Sound Subcarrier temperature drift from switch on	15, 16		4		kHz	See note1
Sound drift with supply	15, 16		2.5		kHz	V_{CC} = 4.5 to 5.5V
Audio Input Impedance	17		25		kΩ	
Audio Input Voltage reference	17		2		V	
Audio Input Level	17		0.88	1	Vp–p	Measured at pin 17
FM THD	1, 2		1		%	Q = 9, Δf = ±35kHz
AM THD	1.2		1		%	Input level 880mV p–p
Picture/Sound Carrier Ratio (FM)	1, 2	10	13	20	dB	R = 0, See note 3

ELECTRICAL CHARACTERISTICS (cont.)

T_{amb}= –10°C to +80°C, V_{CC}=+4.5V to +5.5V. These characteristics are guaranteed over the following conditions (unless otherwise stated). They apply within the specified ambient temperature and supply voltage ranges.

Characteristics	Pin	Value			Units	Conditions
		Min	Typ	Max		
Sound Oscillator FM Deviation	1, 2		250		kHz/V	C = 120pF, L = 5.6µH (Q_L = 9)

NOTES
1. Including external components effects
2. May be increased by use of external resistor, see Fig. 3
3. May be adjusted by use of external resistor dependent on video content, see Fig. 4
4. The above measurements assume nominal 80% modulation depth on vision and sound carriers

ABSOLUTE MAXIMUM RATINGS

All voltages are referred to V_{EE}=0V

Parameter	Pin	Value		Units	Conditions
		Min	Max		
Supply Voltage	11, 19	–0.3	7	V	
Modulation index	3	–0.3	V_{CC}+0.3	V	
Video input	4	–0.3	V_{CC}+0.3	V	
Audio input	17	–0.3	V_{CC}+0.3	V	
FM/AM select	18	–0.3	V_{CC}+0.3	V	
Storage temperature		–55	+125	°C	
DP20 thermal resistance, chip–to–ambient			78	°C/W	
DP20 thermal resistance, chip–to–case			30	°C/W	
MP20 thermal resistance, chip to ambient			93	°C/W	
MP20 thermal resistance, chip–to–case			34	°C/W	
Power consumption at 5.5V			300	mW	

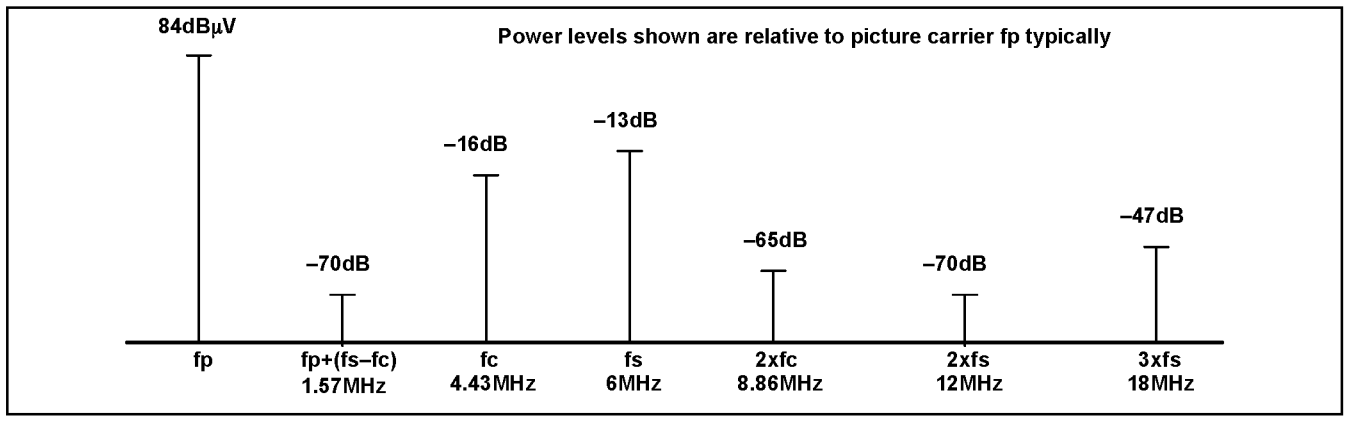

Fig. 3 Frequency spectrum above the Video picture carrier (Q_{TANK} = 9)

VIDEO

The video signal is applied to pin 4 via a coupling capacitor, (see Fig.9). This capacitor provides both clamping and black level hold. The internal peak white AGC can cope with an input signal of between 0.5 and 1.5 volts peak to peak.The full 9.5 dB AGC range is handled within a 600mV span on this storage capacitor.

Pin 3 (MOD INDEX) is used to control both RF carrier amplitude and video polarity, see Fig. 3. Since the video input is internally AGC'd, varying the carrier amplitude will also adjust the video modulation index, see Fig. 4.

For example, for a negative modulation (PAL or NTSC) with an 80% modulation index, pin 3 should be set to 1.1Volts (see Fig. 4). This voltage corresponds to an unmodulated RF output level of 82dBμV, see Fig. 3.

AUDIO

The sound IF oscillator can operate from 4.5MHz to 6.5MHz to cover all sound standards. The centre frequency is determined by the Sound IF Tank LC connected between pins 15 and 16.

The centre frequency is given by.

$$f_0 = \frac{1}{2\pi\sqrt{LC}}$$

The Q factor of the TANK is given by.

$$Q = \frac{1770}{2\pi f_0 L} = 1770 \times 2\pi f_0 C$$

The Q factor of the coil must be high, e.g. >20

Good temperature stability can be achieved by the correct choice of temperature coefficients for C_{sound} and L_{sound}.

The Audio signal should be coupled into pin 17 via a 470nF capacitor. The maximum input level is 1 volts peak to peak.

Selection of AM or FM sound is made via pin 18 (FMAMSEL). The DC value on this pin controls the level of the sound subcarrier. The crossover point between FM and AM sound occurs at $½V_{CC}$ (measured at pin 18). Below this voltage, the modulator is set to FM sound; above it to AM. Graphs for AM and FM sound subcarrier output levels are shown in Figs. 6 and 7.

If AM sound is required, it is recommended that a modulated carrier is fed into the Audio input. Further details of this are mentioned at the end of the datasheet in the paragraph marked "Positive Modulation"

MODULATED RF OUTPUT

The modulated RF outputs from pin 1 and pin 2 consist of open collectors which should be externally connected to V_{CC} via 75Ω resistors. Great care must be taken with the decoupling of the supply to these outputs.

Both outputs are suitable for driving either 75Ω line, or for connection to a balun or impedance matching transformer.

This has the added benefit of minimising common mode coupling, thus giving improved RF performance.

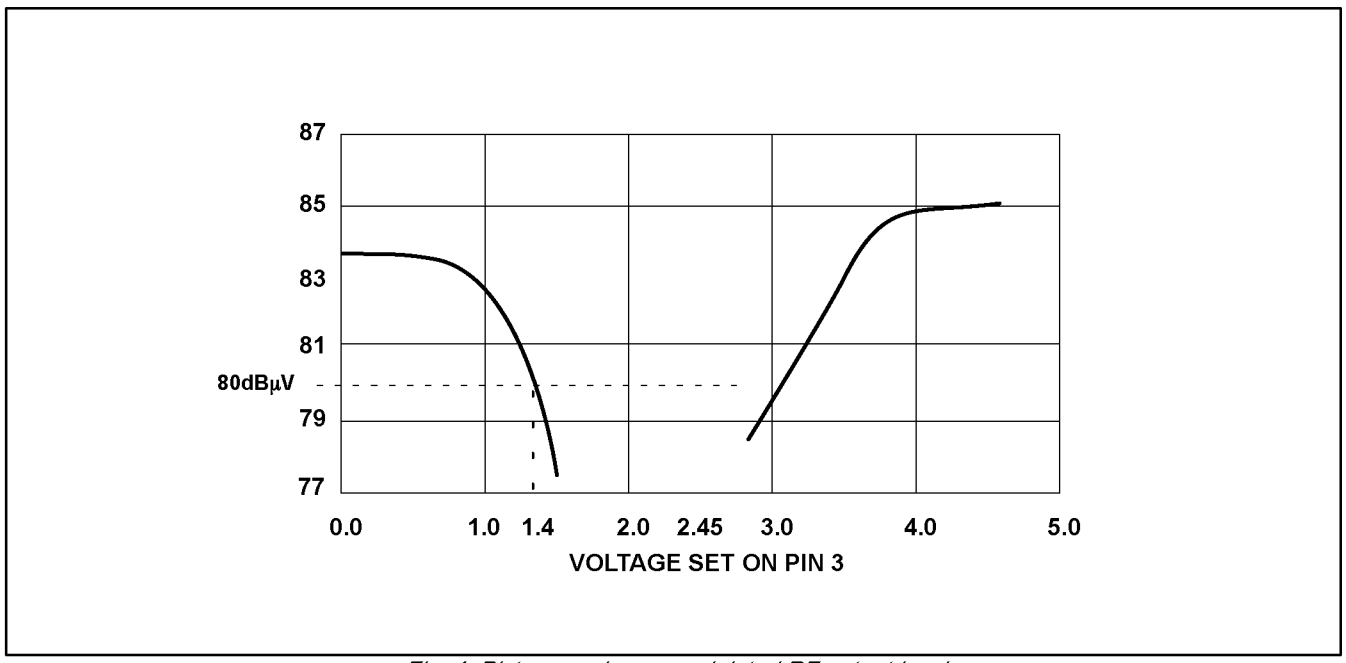

Fig. 4. Picture carrier, unmodulated RF output level

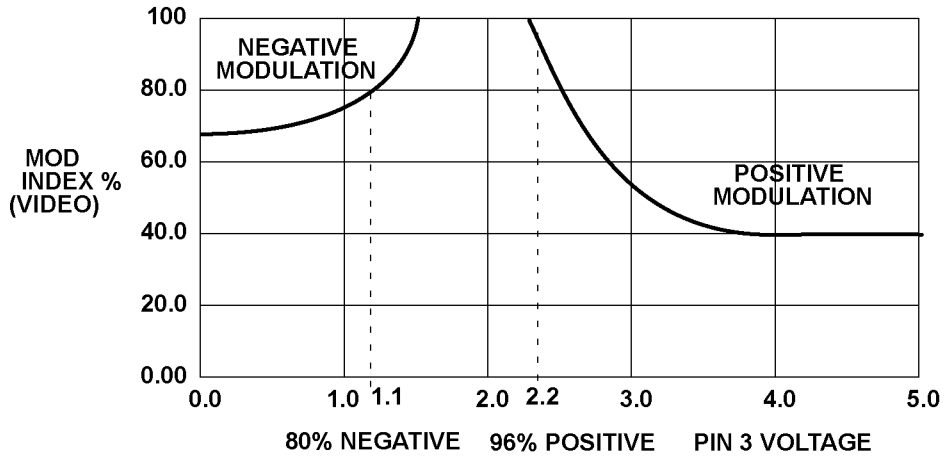

Fig. 5. Modulation index as a function of pin 3 voltage

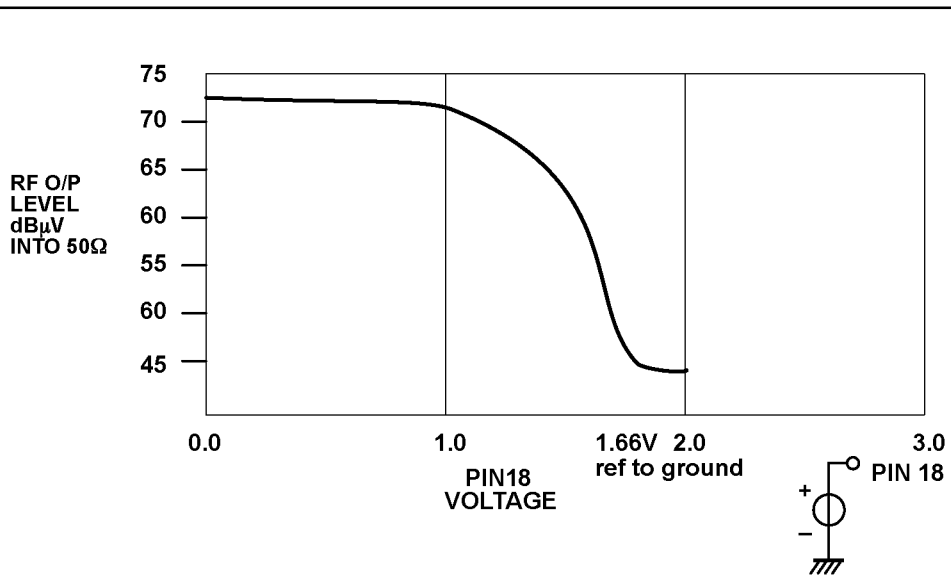

Fig. 6 FM sound carrier amplitude dBμV.

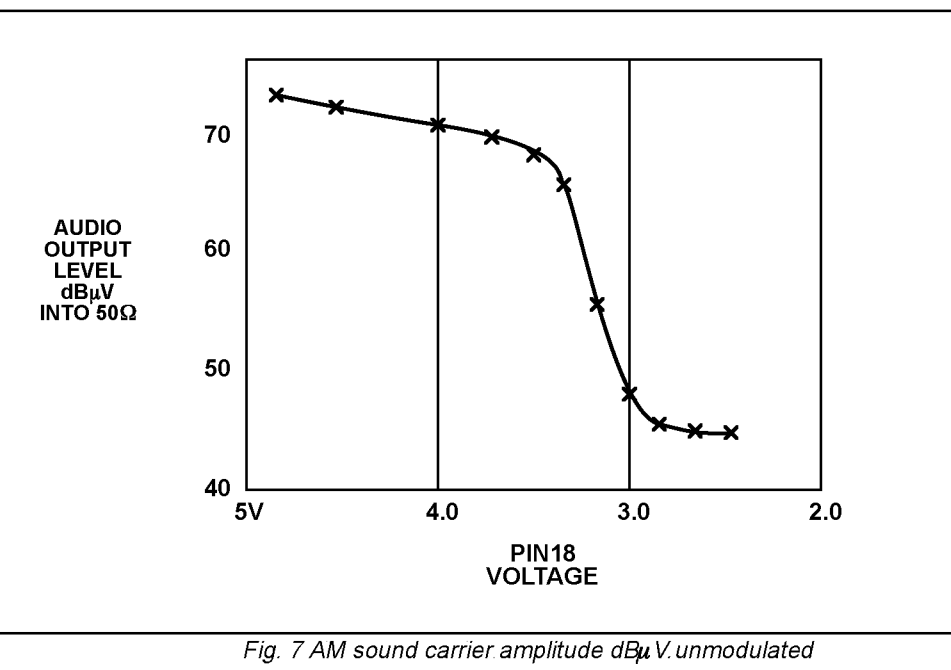

Fig. 7 AM sound carrier amplitude dBμV. unmodulated

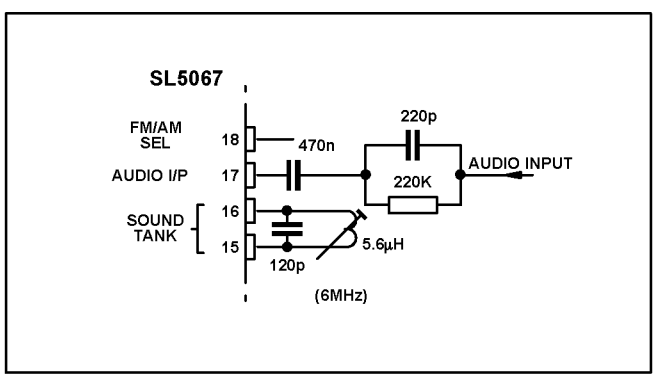

Fig. 8. Typical FM sound section

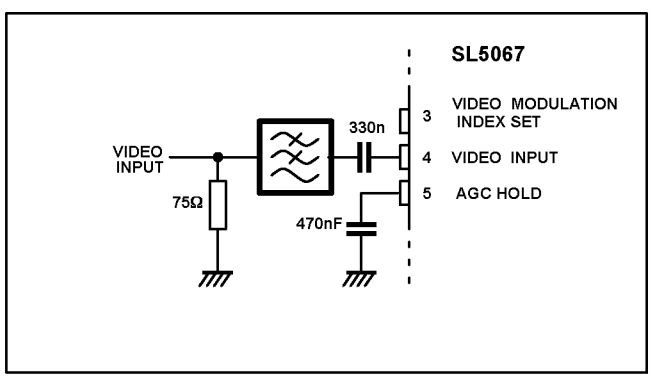

Fig. 9 Video input

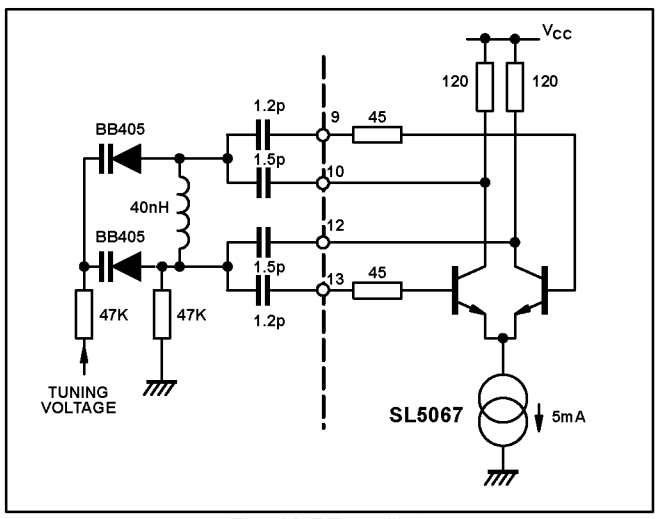

Fig. 10 RF oscillator

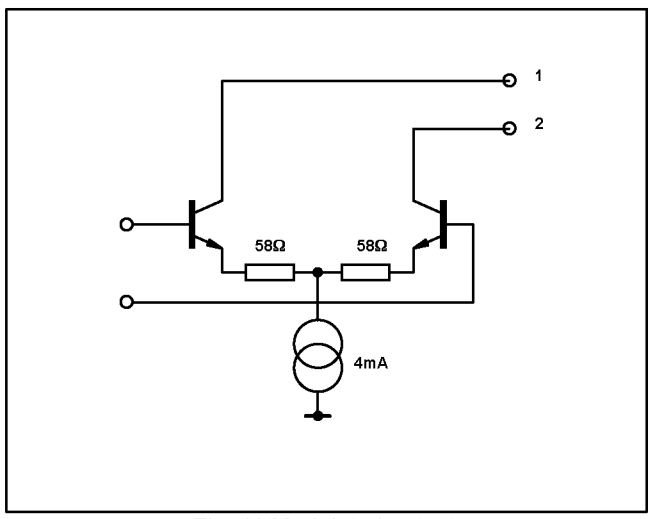

Fig. 11 Modulated outputs

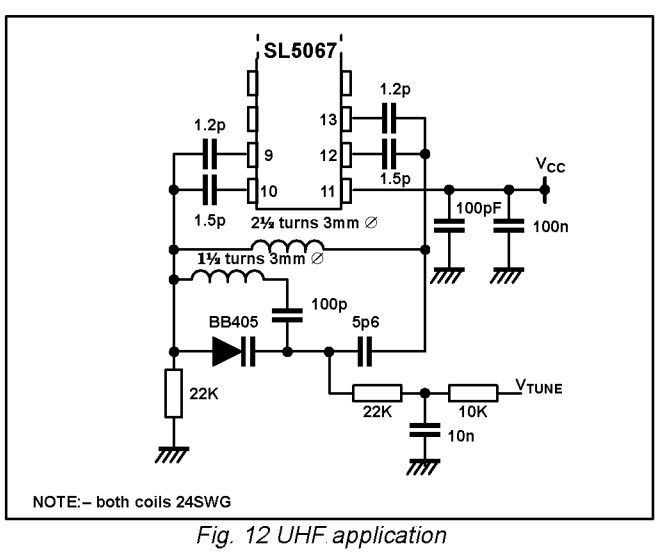

Fig. 12 UHF application

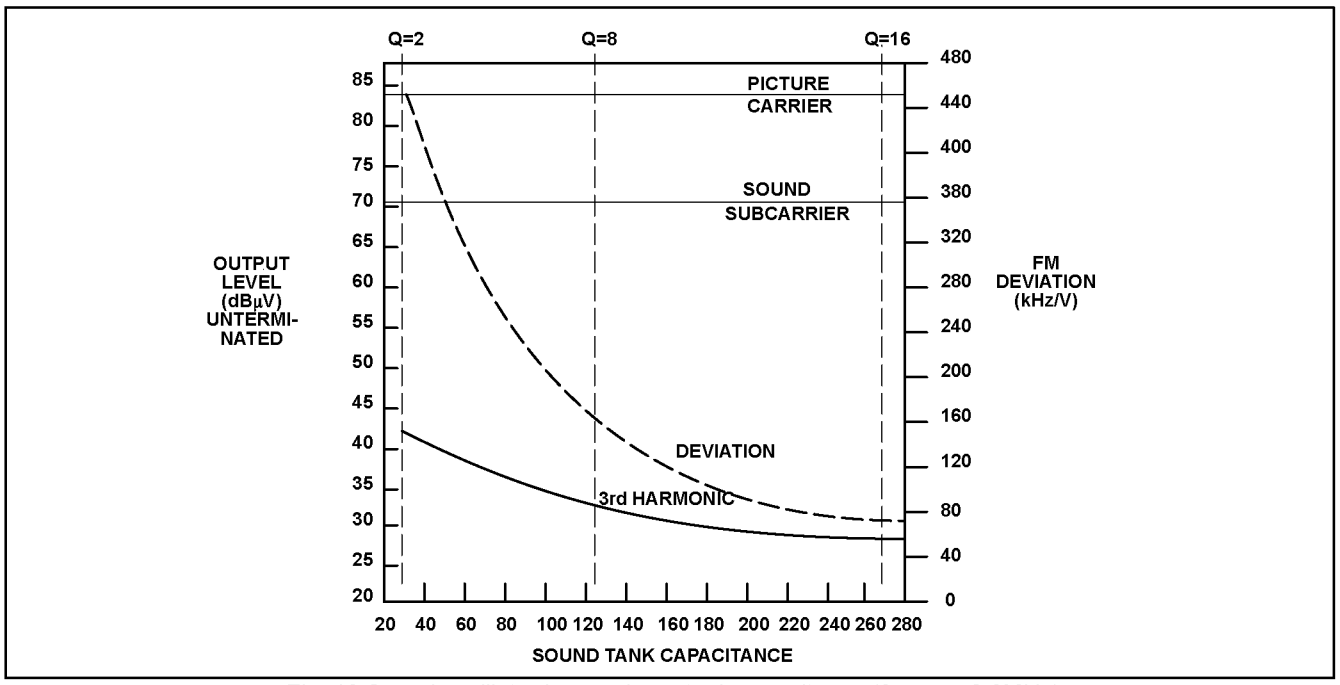

Fig. 13 Sound oscillator harmonics v. tank capacitance (f_{SOUND}=6.0MHz)

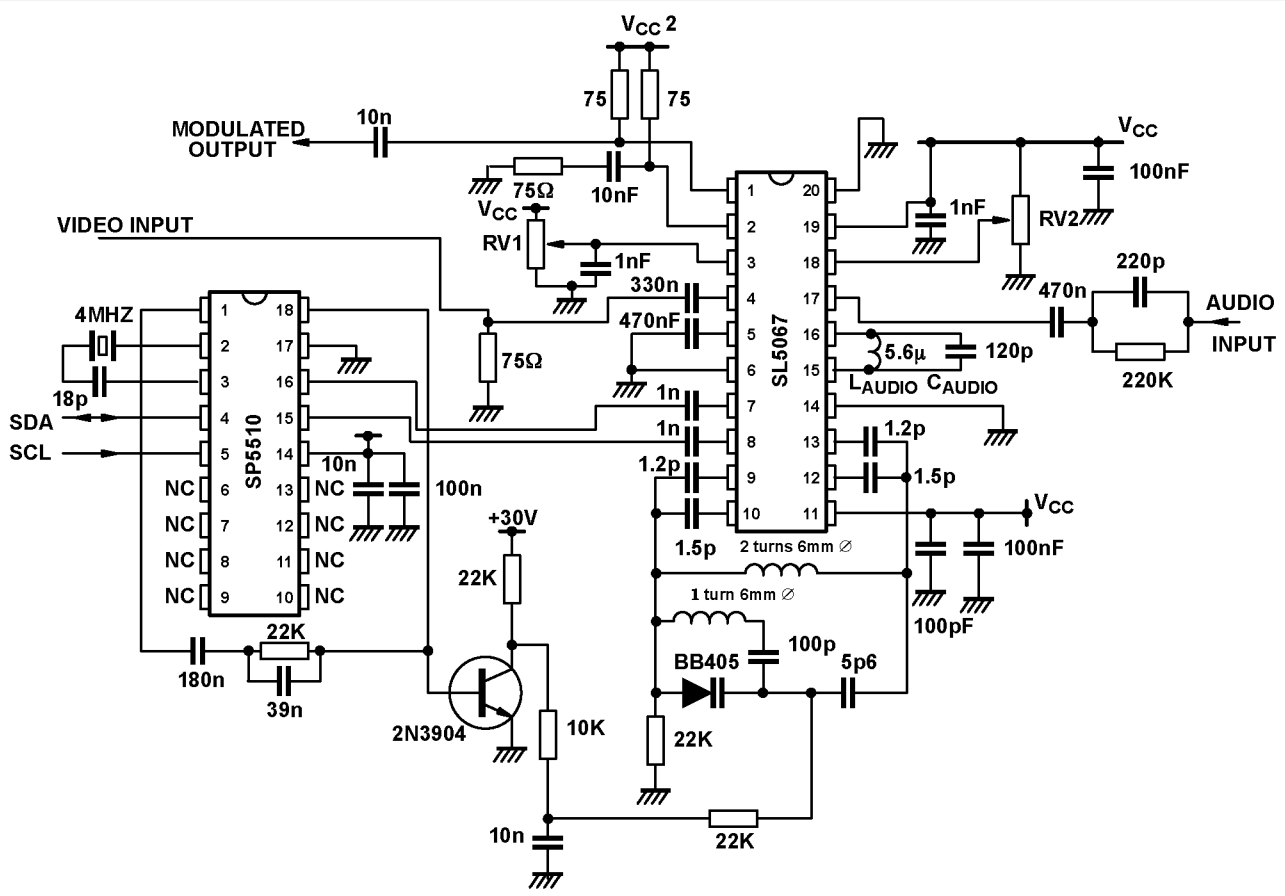

NOTES:– RV1 adjusts the modulation index
RV2 adjusts the picture carrier to sound carrier ratio
In applications the potentiometers should be replaced by 1% fixed resistors connected between VCC and GND
The values chosen must reproduce the correct bias voltages on the relevant input pins

Fig.14 typical application showing video modulator with synthesised oscillator

APPLICATION NOTES

Overview

The key to good modulator performance is to ensure good and compact circuit layout with adequate grounding of all supplies. Earth loops must be avoided or kept as small as possible since RF coupling either through the air, or through the ground plane itself is the single most important factor in degrading modulator performance. Double sided board with a groundplane should be used, and all sensitive pins must be properly decoupled as close to the device as practicable.

Oscillator design and layout

The oscillator should be kept as small as possible to minimise parasitics. It is recommended that the circuit diagram shown in these application notes is used if the entire UHF band is to be covered. For lower frequencies or for applications requiring less tuning range, component values can be adjusted. Surface mount components should be used throughout the circuit and particular care must be taken with placement as the two coils should be as close to the oscillator pins as possible.(See Figs. 16 and 17)

For applications at low VHF frequencies, it is suggested that the values of the coupling capacitors on pins 9, 10, 11 and 12 are increased, 2.2pF capacitors (or greater) may be used for frequencies up to 500MHz but it must be remembered that the larger the coupling capacitor used, the smaller the tuning range will be, as the varactor diode capacitance will form a lower percentage of the total tuning capacitance of the loop.

For fixed frequencies (or small tuning ranges) up to 100MHz, 15pF or 18pF capacitors may be used.

Varactor tuning of the SL5067 should not be attempted unless the application either uses a synthesiser, or a temperature compensating network is used. The capacitance of most varactor diodes changes greatly with temperature, and this must be compensated for if the modulator is to remain on tune to the correct channel.

For applications requiring tuning over only a few channels, an air variable capacitor plus appropriate temperature compensation may be used.

Modulated outputs

Care must be taken with the routing of the modulated outputs and also with the mod index pin, pin3. It is suggested that pin 1 is used, and that the unused modulated output on pin 2 is terminated in a way which looks as physically and electrically similar to the used output on pin 1.

Experiments have shown that a RF coupling problem can exist between pins 2 and 3. This manifests itself at frequencies over 600MHz in applications where pin 3 is not taken directly to ground. Good decoupling of pin 3 (with 10pF and 10nF) will help to reduce these effects.

The modulated outputs must be routed away from the oscillator tank as there is danger of the local oscillator signal coupling directly into the modulated outputs. This will produce distortions in the modulated signal giving bad performance in such characteristics as differential phase and gain. For VHF and other applications below 500MHz RF coupling is not such a problem, however similar care should still be taken with layout in order to maximise device performance.

Use of a balun

It is possible to further improve device performance with the use of a balun to remove the effects of common mode coupling. Although using a balun will add to component cost, it may be the only way to achieve acceptable performance at higher frequencies where common mode noise has made it impossible to achieve a low enough minimum power signal to give the necessary dynamic range in the output signal. A low cost balun wound on a ferrite bead former should be sufficient to provide adequate performance in the majority of applications.

Sound tank circuit

Care must also be taken with the layout of the sound tank, in order to minimise harmonics,and reduce coupling between the audio and video parts of the circuit. The sound tank must be situated as close to the device pins as possible. If this is not done, RF may couple into the sound tank, via the tracks connecting the sound oscillator to the inductor and capacitor. In practice, it is easiest to mount the sound tank capacitor close to, or directly on pin 15 and 16, with the inductor slightly further away. This appears to give the best linearity.

In some cases where some coupling and/or distortion problems are occurring, the addition of small 2p2 capacitors from either side of the tank circuit to ground may improve both FM deviation and linearity.

For optimum performance (in the FM case) the sound tank should be selected to give a Q of around 10. The circuits shown in the datasheet give a value of approximately 9, and are the suggested normalised values to be used.

Lower values of Q will give greater FM deviation per volt input (kHz/Volt), but also increase the level of the 3rd harmonic of the sound subcarrier. This is shown in Fig. 10.

The Q of the inductor chosen should be at least 2.5 times the Q of the tank circuit itself.

It is not recommended that a Q of over 16 is used, as the amplitude of the sound subcarrier fundamental will start to decrease once a Q of approx 12 has been reached. Thus if a Q of 20 were used in order to give good harmonic performance, there would be an unacceptable trade off in terms of picture carrier to sound subcarrier ratio, which would be approx 20dB.

MISCELLANEOUS POINTS

Board layout and decoupling

Good decoupling techniques must be used throughout with the use of surface mount components wherever possible. For best performance, all supplies and sensitive pins should be decoupled as close to the device as possible, with a combination of capacitors, say 100pF and 10nF to ground. The use of double sided board with a groundplane is strongly advised. This should be of particular help in the reduction of oscillator coupling.

Mod index pin

As already stated, great care must be taken with the mod index pin, pin 3. This should be decoupled with chip components as close to the pin as possible. Ideally the mod index should be defined with a DC voltage, thus requiring the use of two external resistors, see Figs 4 and 5. It is also possible to define mod index through the use of a single resistor connected to ground or V_{CC} depending on whether negative or positive modulation is required.

Synthesiser drive

It is suggested that any synthesiser (if used) is driven differentially. This is done by taking both of the prescaler outputs (pin 7 and 8) to the synthesiser via 1nF or 10nF capacitors.

FM/AM select

The voltage on the FM/AM select pin should be defined by two external resistors between v_{cc} and ground, see Figs 6 and 7. The application diagram Fig. 14 shows a potentiometer, RV2 which is used to define the voltage on this pin in the demo board in practice it is suggested that in low total resistance value (5V or less) is used between V_{CC} and GND since this will ensure a constant voltage on pin 18 irrespective of any small internal resistance variations between devices, thus ensuring a constant PC/SC ratio. It should be noted that the sound subcarrier level is referenced to the AGC sidebands rather

than the picture carrier itself. Thus if the picture carrier level is reduced by using a resistor on pin 3 (mod index set), the level of the sound subcarrier will not change. This should be remembered when setting up a modulator to give the desired modulation index and vision/sound carrier ratio.

POSITIVE MODULATION

Several references are made in the text to positive video modulation and AM sound. Whilst it is possible to switch the device into these modes, it should be noted that the SL5067 will not perform to full SECAM specifications.

Use of AM sound may produce sound–in–vision interference at higher modulation depths. It should be possible, however to AC couple in modulated audio. If this is attempted, the sound tank circuit on pins 15 and 16 would not be required. The modulated audio signal should be fed into the Audio input pin (pin 17) via a 470nF capacitor.

The FM/AM select pin can be used as a gain control pin, but will not switch the device between FM and AM modes.

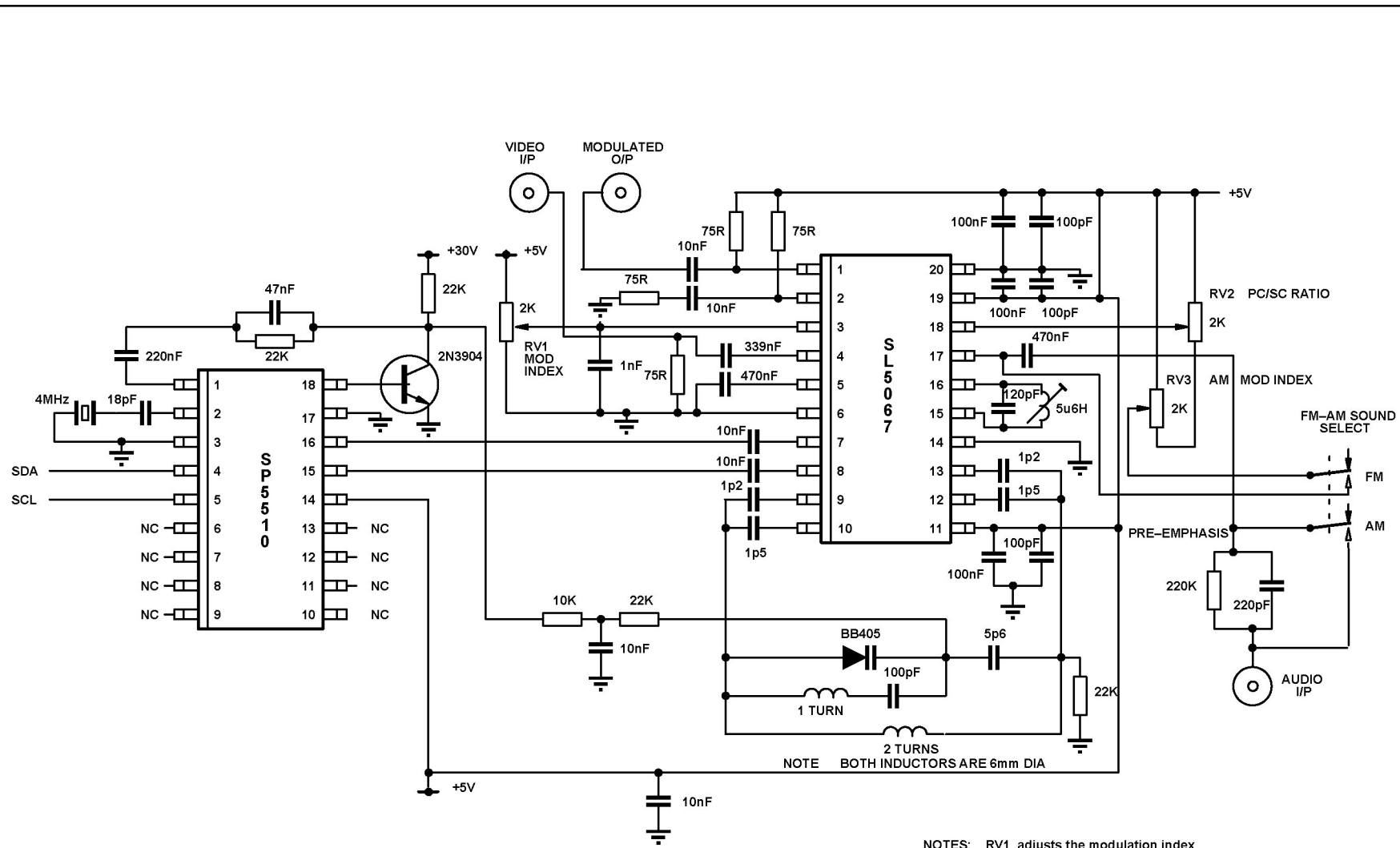

NOTES: RV1 adjusts the modulation index
RV2 adjusts the picture carrier to sound carrier ratio
RV3 adjusts the AM modulation path
In applications the potentiometers should be replaced by 1% fixed resistors connected between Vcc and Gnd.
The values chosen must reproduce the correct bias voltages on the relevent input pins.
For AM sound applications the pre–emphasis cpmponents are bypassed, the I/P being connected to pin 17 via 470nF.
For FM sound applications the pre=emphasis components are switched in and RV3 is switched out.

Fig. 16 Video modular test board circuit diagram

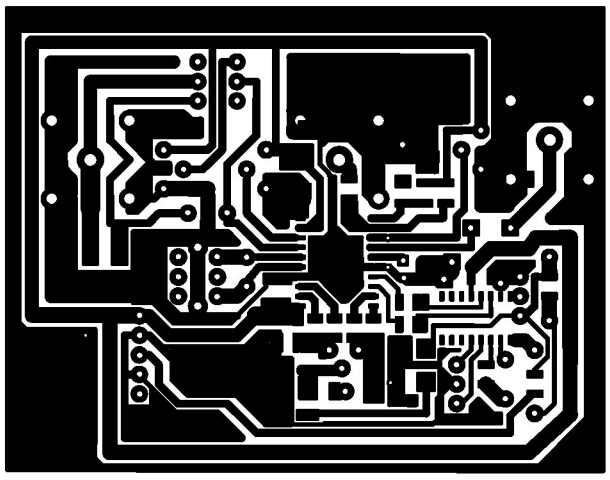

TRACK LAYOUT

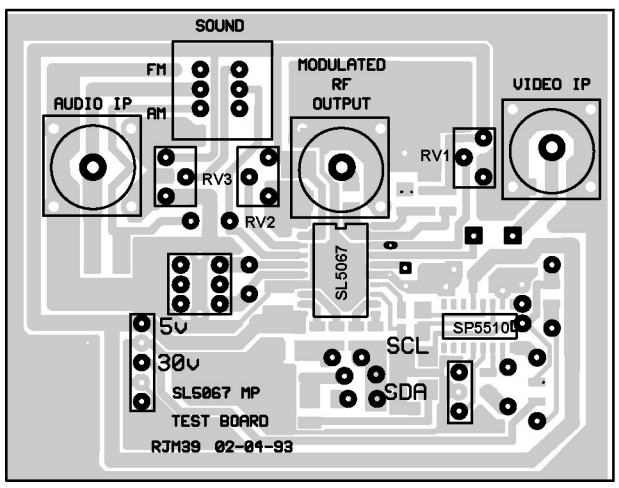

SL5067 TEST BOARD LAYOUT

Fig. 17

SL5067

PACKAGE DETAILS

Dimensions are shown thus: mm (in). For further package information please contact your local Customer Service Centre

20 LEAD PLASTIC DIL DP20

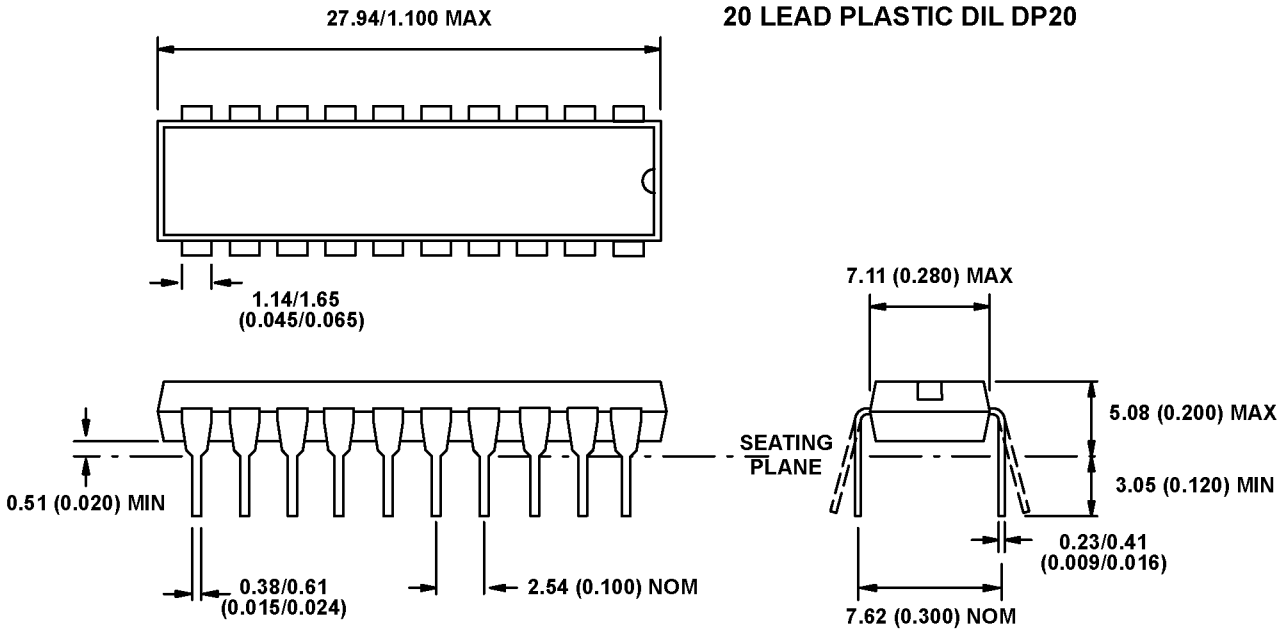

20 LEAD MINIATURE PLASTIC MP20

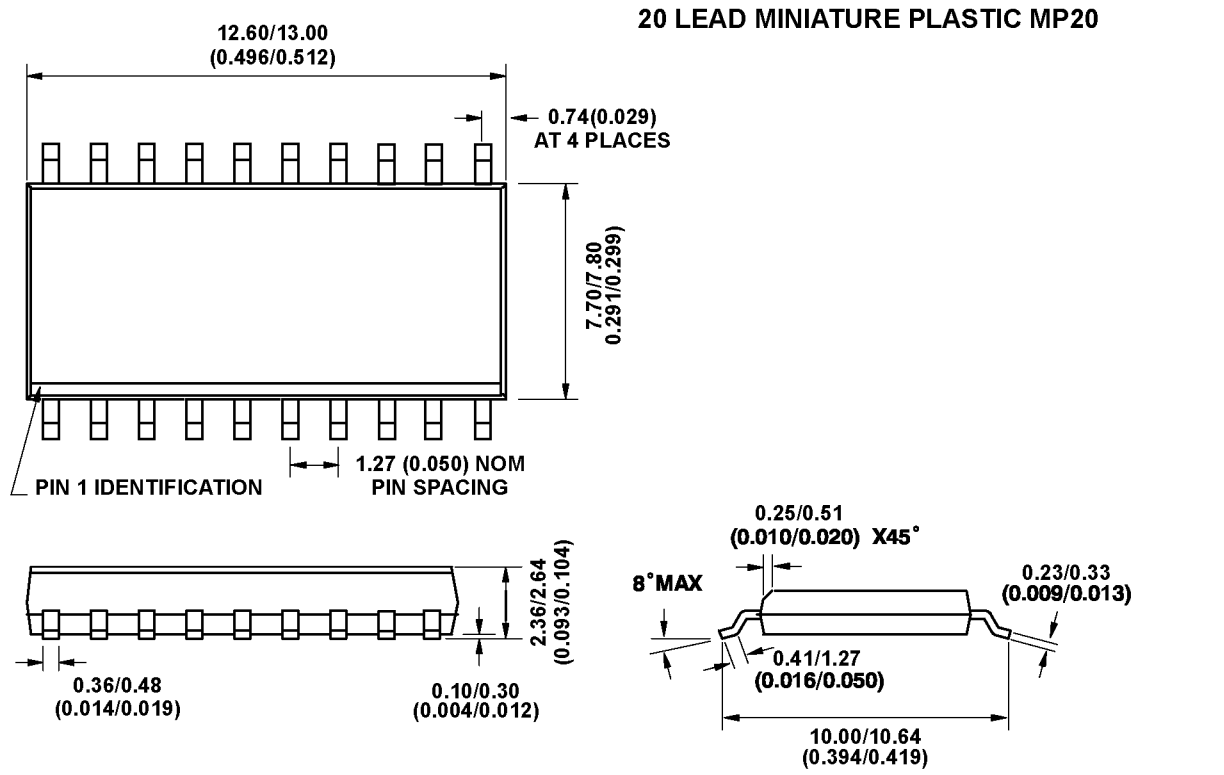

GEC PLESSEY
SEMICONDUCTORS

HEADQUARTERS OPERATIONS

GEC PLESSEY SEMICONDUCTORS
Cheney Manor, Swindon,
Wiltshire United Kingdom SN2 2QW.
Tel: (0793) 518000
Fax: (0793) 518411

GEC PLESSEY SEMICONDUCTORS
P.O. Box 660017 1500 Green Hills Road,
Scotts Valley, California 95067–0017,
United States of America. Tel: (408) 438 2900
Fax: (408) 438 5576

CUSTOMER SERVICE CENTRES

- **FRANCE & BENELUX** Les Ulis Cedex Tel: (1) 64 46 23 45 Tx: 602858F Fax: (1) 64 46 06 07
- **GERMANY** Munich Tel: (089) 3609 06 0 Tx: 523980 Fax: (089) 3609 06 55
- **ITALY** Milan Tel: (02) 66040867 Fax: (02) 66040993
- **JAPAN** Tokyo Tel: (03) 3296–0281 Fax: (03) 3296–0228
- **NORTH AMERICA Integrated Circuits and Microwave Products,** Scotts Valley, USA Tel: (408) 438 2900 Fax: (408) 438 7023
  Hybrid Products, Farmingdale, USA Tel: (516) 293 8686 Fax: (516) 293 0061
- **SOUTH EAST ASIA** Singapore Tel: (65) 3827708 Fax: (65) 3828872
- **SWEDEN** Stockholm Tel: 46 8 7029770 Fax: 46 8 6404736
- **UNITED KINGDOM & SCANDINAVIA** Swindon Tel: (0793) 518510 Tx: 444410 Fax: (0793) 518582

These are supported by Agents and Distributors in major countries world–wide.

© GEC Plessey Semiconductors 1994 Publication No. D.S. 3802 Issue No. 1.3 January 1994

This publication is issued to provide information only, which (unless agreed by the Company in writing) may not be used, applied or reproduced for any purpose nor form part of any order or contract nor to be regarded as a representation relating to the products or services concerned. No warranty or guarantee express or implied is made regarding the capability, performance or suitability of any product or service. The Company reserves the right to alter without proir knowledge the specification, design, price of any product or service. Information concerning possible methods of use is provided as a guide only and does not constitute any guarantee that such methods of use will be satisfactory in a specific piece of equipment. It is the user's responsibility to fully determine the performance and suitability of any equipment using such information and to ensure that any publication or data used is up to date and has not been superseded. These products are not suitable for use in any medical products whose failure to perform may result in significant injury or death to the user. All products and materials are sold and services provided subject to the Company's conditions of sale, which are available on request.