DL-PS-96/24-JB-OD-UNI-DIM

UNIVERSAL DIMMING LED POWER SUPPLY
24V DC HARDWIRE IN JUNCTION BOX ENCLOSURE

JESCO LIGHTING GROUP

Fixture Type	
Project	
Notes	

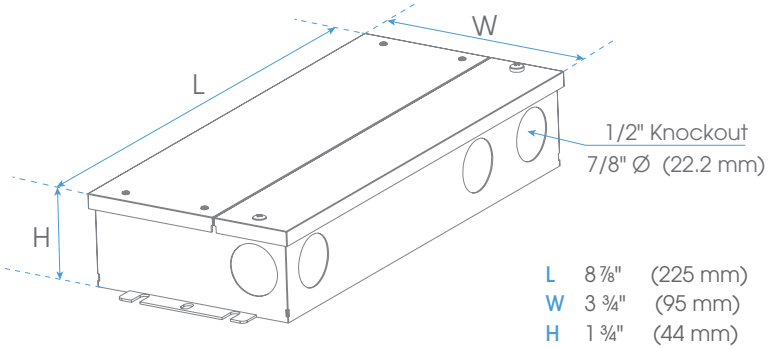

The DL-PS-XX/24-JB-OD-UNI-DIM series is an Outdoor Class 2 Universal Dimming 24V Power Supply with Junction Boxes for 30W, 60W, 96W, 96Wx2, 96Wx3, 96Wx4. It works with Forward phase, Reverse Phase, or 0-10V dimmers. With universal input voltage – 100 to 277V AC, it provides smooth, flicker-free PWM dimming (PWM Frequency: 800Hz). IP66, indoor/outdoor – for dry, damp, and wet locations. Cooling by free air convection. Load 10-100%, short circuit, over-temperature, and over-loading protection. Built-in PFC function, it is also UL8750 Listed and Class 2 power unit. Weights only 1.3kg (2.9lb.), includes (6) 7/8" knockouts metal enclosures.

120 - 277V AC | 24V DC | ELV REVERSE PHASE | TRIAC FORWARD PHASE | 0 -10 / 1-10V | IP66 | WET OUTDOOR | 5 YEAR WARRANTY | INSTALL | UL CERTIFIED SAFETY US E314183

CLASS 2
TYPE HL

SPECIFICATIONS

INPUT

INPUT VOLTAGE	120 - 277V AC
INPUT FREQUENCY	47-63Hz
INPUT CURRENT (MAX.)	1.3A @100V AC
POWER FACTOR (TYP.) **@ FULL LOAD**	0.98 @ 120V AC 0.95 @ 277V AC
EFFICACY (TYP.) **@ FULL LOAD**	83% @ 120V AC 84% @ 277V AC
INRUSH CURRENT (TYP.)	20A, 50%, 1.6ms
THD (TYP.) **@ FULL LOAD**	<20%
LEAKAGE CURRENT	<0.50mA

OUTPUT

OUTPUT VOLTAGE	24V DC
RATED OUTPUT POWER	96W
RATED LOAD CURRENT	4.0A
VOLTAGE TOLERANCE	+/-0.5V
VOLTAGE REGULATION	+/-0.5%
LOAD REGULATION	+/-1%

ENVIRONMENT

IP RATINGS	IP66, Indoor/Outdoor – For Dry, Damp and Wet locations
OPERATING AMBIENT TEMPERATURE†	-40°C to +60°C (-40°F to +140°F)
OPERATING AMBIENT HUMIDITY	20~90% RH, non-condensing
STORAGE TEMPERATURE	-40°C to +80°C (-40°F to +176°F)
STORAGE HUMIDITY	10~95% RH
TEMPERATURE COEFFICIENT	+/-0.03%/°C (0~50°C)
VIBRATION	10~500Hz, 5G 10min./1 cycle period for 60min, each along X, Y and Z axes

† See Derating Curve

SAFETY & EMC

SAFETY STANDARDS	UL8750
WITHSTAND VOLTAGE	I/P-O/P:1.88KV AC
ISOLATION RESISTANCE	I/P-O/P:100MΩ / 500V DC / 25°C / 70% RH
EMC EMISSION	FCC Part 15 B

PROTECTION

SHORT CIRCUIT	Shut down o/p voltage, re-power on to recover after fault condition is removed
OVER LOADING	≤120% Hiccup mode,recovers automatically after fault condition is removed
OVER TEMPERATURE	212°F+/-50°F (100°C +/-10°C) shut down o/p voltage, automatically recover after cooling

NY 15 Harbor Park Drive
Port Washington, NY 11050
Main 800 527 7796
Fax 855 265 5768

CA 219 South 6th Ave
City of Industry, CA 91746
Main 800 527 7796
Fax 855 265 5768

support@jescolighting.com
Tech Support 855 592 0029

© 2023 JESCO LIGHTING GROUP, LLC

DL-PS-96/24-JB-OD-UNI-DIM

UNIVERSAL DIMMING LED POWER SUPPLY
24V DC HARDWIRE IN JUNCTION BOX ENCLOSURE

Fixture Type	
Project	
Notes	

WIRING DIAGRAM

TYPICAL DIRECT WIRING: **NON DIMMING APPLICATIONS**

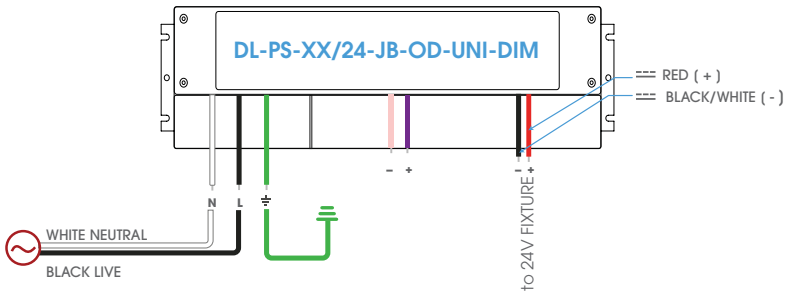

TYPICAL DIRECT WIRING: **TRIAC DIMMING**

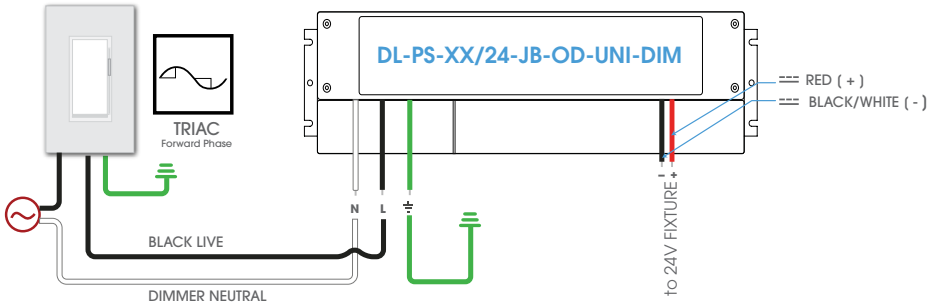

TYPICAL DIRECT WIRING: **0 - 10 DIMMING (LOW VOLTAGE 0 - 10V DIMMER)**

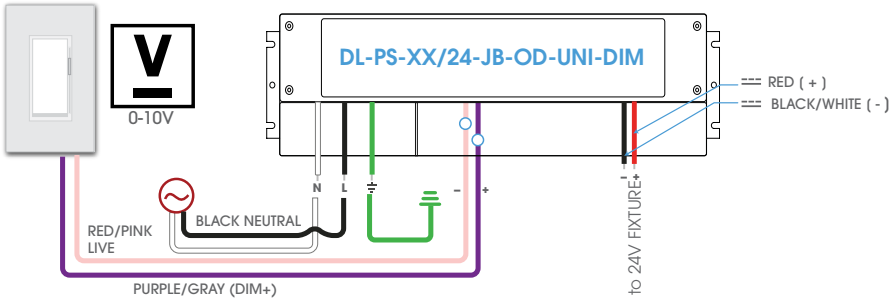

TYPICAL DIRECT WIRING: **ELV DIMMING**

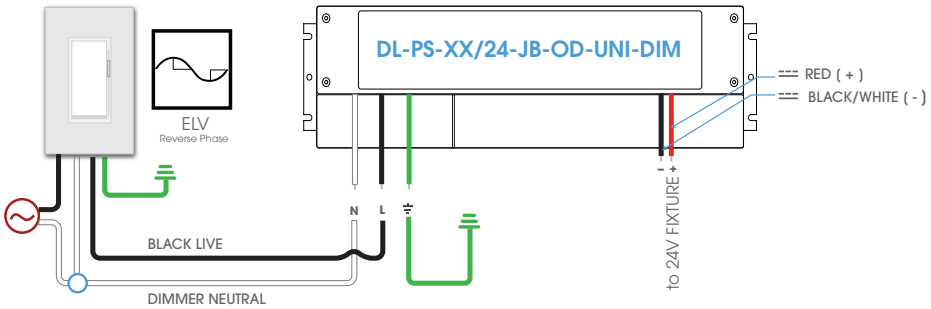

NY 15 Harbor Park Drive
Port Washington, NY 11050
Main 800 527 7796
Fax 855 265 5768

CA 219 South 6th Ave
City of Industry, CA 91746
Main 800 527 7796
Fax 855 265 5768

support@jescolighting.com
Tech Support 855 592 0029

© 2023 JESCO LIGHTING GROUP, LLC

DL-PS-96/24-JB-OD-UNI-DIM

UNIVERSAL DIMMING LED POWER SUPPLY
24V DC HARDWIRE IN JUNCTION BOX ENCLOSURE

Fixture Type	
Project	
Notes	

WIRING DIAGRAM • CONNECT TO OPTIONAL EM-LIN

EMERGENCY BATTERY BACK UP ADAPTIVE CONSTANT OUTPUT POWER

For use up to **60W load** with 90 min. operational time

Any load exceeding the max EM output requires connecting dimming wires as shown in the diagrams.

<15W ON/OFF ONLY

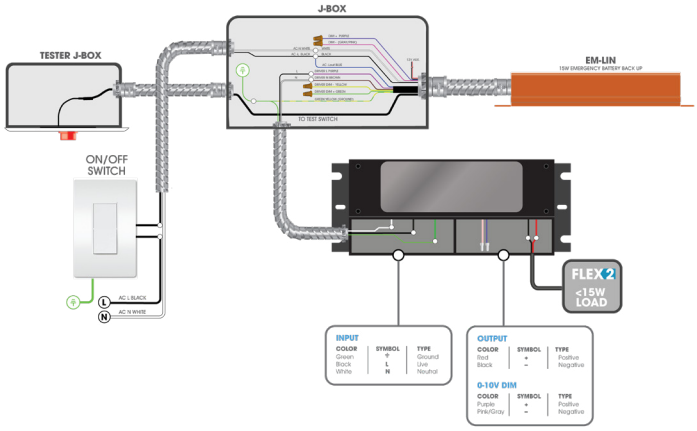

>15W ON/OFF ONLY

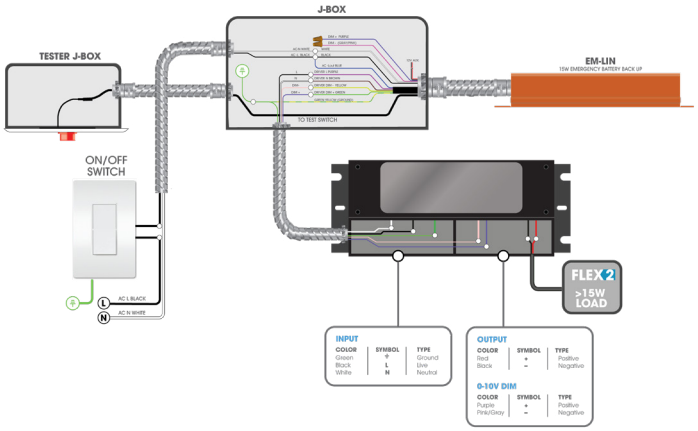

<15W 0-10V DIMMING

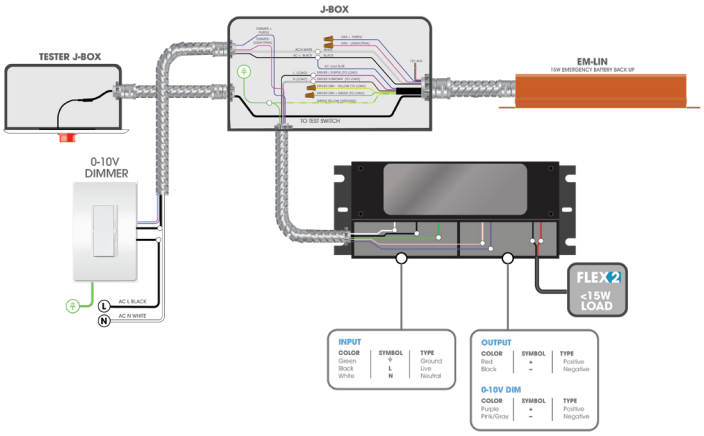

>15W 0-10V DIMMING

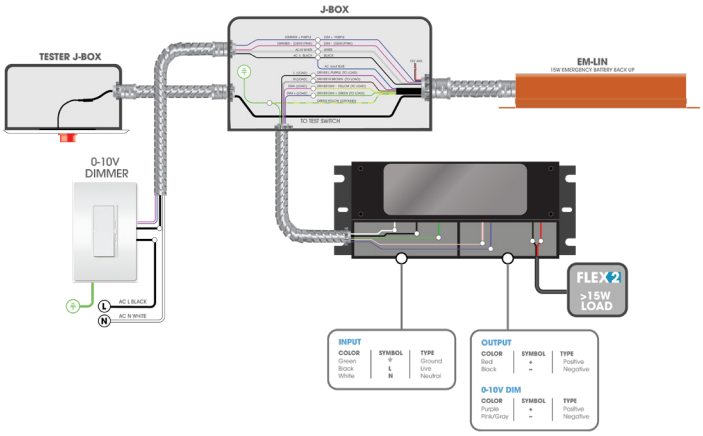

EM-LIN SPEC INSTALL

NY 15 Harbor Park Drive
Port Washington, NY 11050
Main 800 527 7796
Fax 855 265 5768

CA 219 South 6th Ave
City of Industry, CA 91746
Main 800 527 7796
Fax 855 265 5768

support@jescolighting.com
Tech Support 855 592 0029

© 2023 JESCO LIGHTING GROUP, LLC

DL-PS-96/24-JB-OD-UNI-DIM

UNIVERSAL DIMMING LED POWER SUPPLY
24V DC HARDWIRE IN JUNCTION BOX ENCLOSURE

JESCO LIGHTING GROUP

Fixture Type	
Project	
Notes	

WIRING DIAGRAM • CONNECT TO OPTIONAL EM-LIN-25W

EMERGENCY BATTERY BACK UP ADAPTIVE CONSTANT OUTPUT POWER

For use up to **96W load** with 90 min. operational time

Any load exceeding the max EM output requires connecting dimming wires as shown in the diagrams.

<25W ON/OFF ONLY

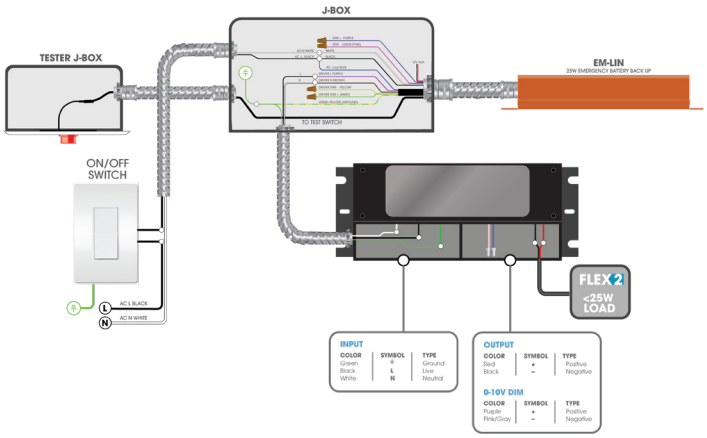

>25W ON/OFF ONLY

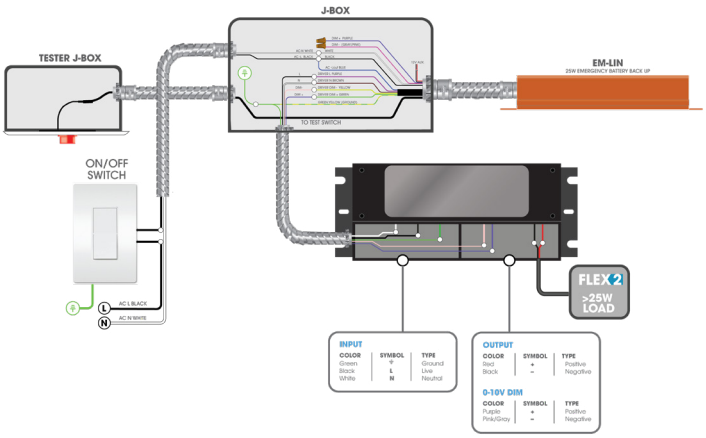

<25W 0-10V DIMMING

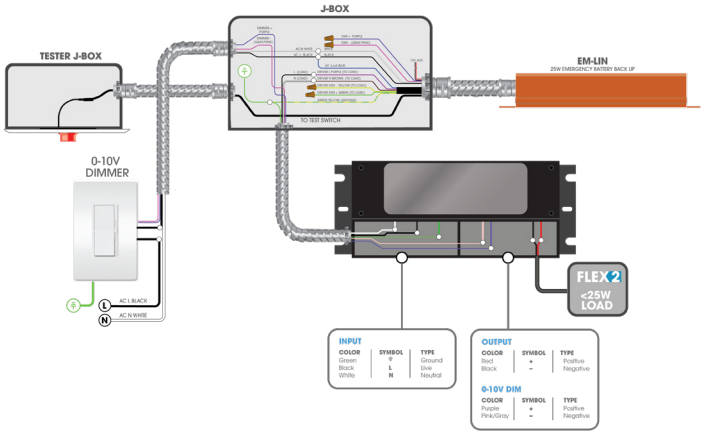

>25W 0-10V DIMMING

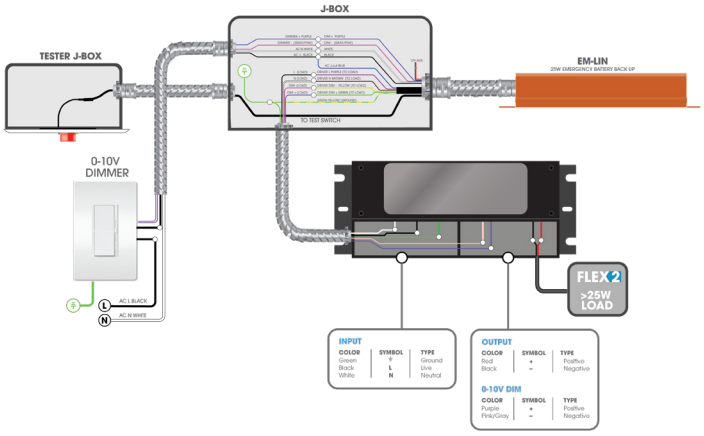

EM-LIN SPEC INSTALL

NY 15 Harbor Park Drive
Port Washington, NY 11050
Main 800 527 7796
Fax 855 265 5768

CA 219 South 6th Ave
City of Industry, CA 91746
Main 800 527 7796
Fax 855 265 5768

support@jescolighting.com
Tech Support 855 592 0029

© 2023 JESCO LIGHTING GROUP, LLC

DL-PS-96/24-JB-OD-UNI-DIM

UNIVERSAL DIMMING LED POWER SUPPLY
24V DC HARDWIRE IN JUNCTION BOX ENCLOSURE

JESCO LIGHTING GROUP

Fixture Type	
Project	
Notes	

RECOMMENDED DIMMERS

BRAND	MODEL NUMBER	TYPE	INPUT VOLTAGE RANGE	DIMMING RANGE
LUTRON	SCL-153PR-WH	Forward Phase	100-130V	0-100%
	DVCL-153PR-WH	Forward Phase	100-130V	0-100%
	DVWCL-153PH-LA	Forward Phase	100-130V	0-100%
	CTCL-153PDH-LA	Forward Phase	100-130V	0-100%
	TGCL-153PR-WH	Forward Phase	100-130V	0-100%
	TGCL-153PH-WH	Forward Phase	100-130V	0-100%
	MACL-153MH-LA	Forward Phase	100-130V	20-100%
	CT-600PR-IV	Forward Phase	100-130V	0-100%
	CT-600PR-WH	Forward Phase	100-130V	0-100%
	CT-103PR-WH	Forward Phase	100-130V	0-100%
	DV-600PR-BL	Forward Phase	100-130V	0-100%
	DV-600PR-WH	Forward Phase	100-130V	0-100%
	MIR-600M	Forward Phase	100-130V	2-100%
	TG-600PR-LA	Forward Phase	100-130V	4-100%
	TG-600PR-IV	Forward Phase	100-130V	0-100%
	TG-600PR-WH	Forward Phase	100-130V	0-100%
	TG-10PR-WH	Forward Phase	100-130V	0-100%
	S-600PR-WH	Forward Phase	100-130V	0-100%
	MRF2-6ND-120-AL	Forward Phase	100-130V	0-100%
	MSCELV-600M	Reverse Phase	100-130V	0-100%
	MEF2-6ELV-120	Reverse Phase	100-130V	0-100%
	MRF2-6CL-GR	Forward Phase	100-130V	15-100%
	DZ6HD	Forward Phase	100-130V	22-100%
	PD-6WCL	Forward Phase	100-130V	19-100%
	PD-5NE-WH	Forward Phase	100-130V	18-100%
	NTLV-600-277-WH	Forward Phase	277V	1-100%
	ST-12P-277	Forward Phase	277V	12-100%
	NTF-10-277	Forward Phase	277V	1-100%
	DVELV-300P-WH	Reverse Phase	100-130V	20-100%
	SELV-300P	Reverse Phase	100-130V	15-100%
	DVSTV-WH	0-10V	120-277V	9-100%
	DVTV-WH	0-10V	120-277V	9-100%

BRAND	MODEL NUMBER	TYPE	INPUT VOLTAGE RANGE	DIMMING RANGE
LEVITON	VPI06-1LZ	Forward Phase	100-130V	15-100%
	TTI06-1LZ	Forward Phase	100-130V	1-100%
	IPL06	Forward Phase	100-130V	15-100%
	DZ6HD	Forward Phase	100-130V	17-100%
	TBL03	Forward Phase	100-130V	15-100%
	6672	Forward Phase	100-130V	20-100%
	6602	Forward Phase	100-130V	0-100%
	6674	Forward Phase	100-130V	16-100%
	AWSMT-EAW	Reverse Phase	100-130V	0-100%
	AWSMT-EAW	Reverse Phase	277V	0-100%
	6683	Forward Phase	100-130V	10-100%
LEGRAND	RHCL453PNICCV6	Forward Phase	100-130V	6-100%
	WSCL450TCCCV4	Forward Phase	100-130V	11-100%
	LSCL453PLACCV4	Forward Phase	100-130V	11-100%
CRESTON	CLW-DELVEX-P-W-S	Reverse Phase	100-130V	11-100%
EATON	DF10P-C1	0-10V	120-277V	5-100%

DERATING CURVE

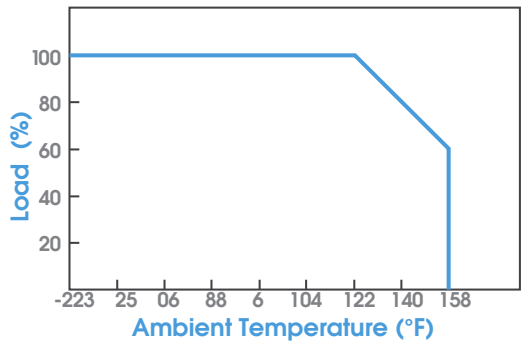

NY 15 Harbor Park Drive
Port Washington, NY 11050
Main 800 527 7796
Fax 855 265 5768

CA 219 South 6th Ave
City of Industry, CA 91746
Main 800 527 7796
Fax 855 265 5768

support@jescolighting.com
Tech Support 855 592 0029

© 2023 JESCO LIGHTING GROUP, LLC