REVISIONS			
LTR	DESCRIPTION	DATE (YR-MO-DA)	APPROVED
A	Add device class V criteria. Add RHA data. Editorial changes throughout. -jak	98-02-04	Thomas M. Hess
B	Add vendor CAGE F8859. Add case outline X. Add table III, delta limits. Update boilerplate to MIL-PRF-38535 requirements. - jak.	01-07-13	Thomas M. Hess
C	Update boilerplate to MIL-PRF-38535 requirements. - LTG	08-05-15	Thomas M. Hess
D	Update boilerplate paragraphs and radiation paragraphs 4.4.4.1 – 4.4.4.1.1 to the current MIL-PRF-38535 requirements. - LTG	14-04-23	Thomas M. Hess
E	Manufacturer (CAGE code 0C7V7) name change. Update boilerplate to MIL-PRF-38535 requirements. Add vendor part number to approved sources. - DRH	21-02-05	Muhammad A. Akbar

REV																				
SHEET																				
REV	E	E																		
SHEET	15	16																		

REV STATUS	REV	E	E	E	E	E	E	E	E	E	E	E	E	E	E	E	E
OF SHEETS	SHEET	1	2	3	4	5	6	7	8	9	10	11	12	13	14		

PMIC N/A

PREPARED BY
Greg A. Pitz

DLA LAND AND MARITIME
COLUMBUS, OHIO 43218-3990
https://www.dla.mil/LandandMaritime

STANDARD MICROCIRCUIT DRAWING

THIS DRAWING IS AVAILABLE FOR USE BY ALL DEPARTMENTS AND AGENCIES OF THE DEPARTMENT OF DEFENSE

AMSC N/A

CHECKED BY
D. A. DiCenzo

APPROVED BY
Michael A. Frye

DRAWING APPROVAL DATE
88-02-12

REVISION LEVEL
E

MICROCIRCUIT, DIGITAL, ADVANCED CMOS, DUAL J-$\overline{K}$ FLIP-FLOP WITH SET AND CLEAR, TTL COMPATIBLE INPUTS, MONOLITHIC SILICON

SIZE	CAGE CODE	
A	**67268**	**5962-88534**

SHEET 1 OF 16

DISTRIBUTION STATEMENT A. Approved for public release. Distribution is unlimited.

1. SCOPE

1.1 Scope. This drawing documents two product assurance class levels consisting of high reliability (device class Q and M) and space application (device class V). A choice of case outlines and lead finishes are available and are reflected in the Part or Identifying Number (PIN). When available, a choice of Radiation Hardness Assurance (RHA) levels is reflected in the PIN.

1.2 PIN. The PIN is as shown in the following examples.

For device class M and Q:

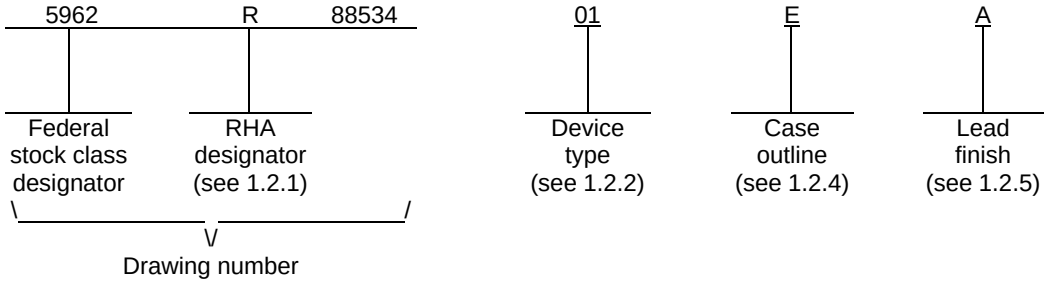

For device class V:

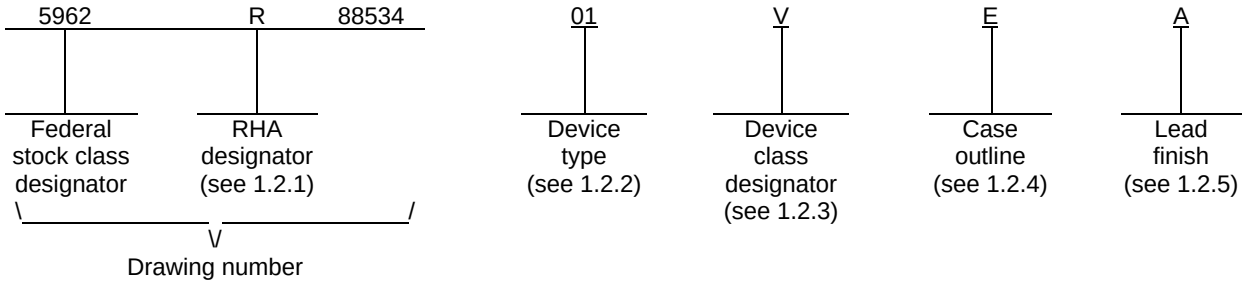

1.2.1 RHA designator. Device classes Q and V RHA marked devices meet the MIL-PRF-38535 specified RHA levels and are marked with the appropriate RHA designator. Device class M RHA marked devices meet the MIL-PRF-38535, appendix A specified RHA levels and are marked with the appropriate RHA designator. A dash (-) indicates a non-RHA device.

1.2.2 Device type(s). The device type(s) identify the circuit function as follows:

Device type	Generic number	Circuit function
01	54ACT109	Dual J-K positive edge-triggered flip-flop with TTL compatible inputs
02	54ACT11109	Dual J-K positive edge-triggered flip-flop with TTL compatible inputs

1.2.3 Device class designator. The device class designator is a single letter identifying the product assurance level as listed below. Since the device class designator has been added after the original issuance of this drawing, device classes M and Q designators will not be included in the PIN and will not be marked on the device.

Device class	Device requirements documentation
M	Vendor self-certification to the requirements for MIL-STD-883 compliant, non-JAN class level B microcircuits in accordance with MIL-PRF-38535, appendix A
Q or V	Certification and qualification to MIL-PRF-38535

1.2.4 Case outline(s). The case outline(s) are as designated in MIL-STD-1835 and as follows:

Outline letter	Descriptive designator	Terminals	Package style
E	GDIP1-T16 or CDIP2-T16	16	Dual-in-line
F	GDFP2-F16 or CDFP3-F16	16	Flat pack
X	CDFP3-F16	16	Flat pack
2	CQCC1-N20	20	Square leadless chip carrier

1.2.5 Lead finish. The lead finish is as specified in MIL-PRF-38535 for device classes Q and V or MIL-PRF-38535, appendix A for device class M.

1.3 Absolute maximum ratings. 1/ 2/ 3/

Supply voltage range (V_{CC}) ..... -0.5 V dc to +6.0 V dc
DC input voltage range (V_{IN}) ..... -0.5 V dc to V_{CC} + 0.5 V dc
DC output voltage range (V_{OUT}) ..... -0.5 V dc to V_{CC} + 0.5 V dc
Clamp diode current..... ±20 mA
DC output current (per pin) ..... ±50 mA
DC V_{CC} or GND current (per pin) ..... ±100 mA
Maximum power dissipation (P_D) ..... 500 mW
Storage temperature range (T_{STG}) ..... -65°C to +150°C
Lead temperature (soldering, 10 seconds) ..... +300°C
Thermal resistance, junction-to-case (Θ_{JC}) ..... See MIL-STD-1835
Junction temperature (T_J) ..... +175°C 4/

1.4 Recommended operating conditions. 2/ 3/

Supply voltage range (V_{CC}) ..... 4.5 V dc to +5.5 V dc
Input voltage range (V_{IN}) ..... +0.0 V dc to V_{CC}
Output voltage range (V_{OUT})..... +0.0 V dc to V_{CC}
Case operating temperature range (T_C)..... -55°C to +125°C
Input rise or fall times (V_{CC} = 4.5 V to 5.5 V)..... 0 to 8 ns/V
Minimum setup time, Jn or $\overline{K}$n to CPn, (t_s):
T_C = -55°C and +125°C, V_{CC} = 4.5 V ..... 5.5 ns
Minimum removal time, $\overline{CD}$n or $\overline{SD}$n to CPn, (t_{rem}):
T_C = -55°C and +125°C, V_{CC} = 4.5 V ..... 0.5 ns
Minimum pulse width CPn (t_{pw}):
T_C = -55°C and +125°C, V_{CC} = 4.5 V ..... 5.0 ns
Minimum pulse width $\overline{CD}$n or $\overline{SD}$n (t_{pw}):
T_C = +25°C, V_{CC} = 4.5 V..... 6.5 ns
T_C = -55°C and +125°C, V_{CC} = 4.5 V ..... 7.0 ns
Minimum hold time, Jn or $\overline{K}$n to CPn (t_h):
T_C = -55°C and +125°C, V_{CC} = 4.5 V ..... 2.0 ns
Maximum frequency, (f_{max}):
T_C = +25°C, V_{CC} = 4.5 V..... 95 MHz
T_C = -55°C and +125°C, V_{CC} = 4.5 V ..... 85 MHz

1/ Stresses above the absolute maximum rating may cause permanent damage to the device. Extended operation at the maximum levels may degrade performance and affect reliability.
2/ Unless otherwise noted, all voltages are referenced to GND.
3/ The limits for the parameters specified herein shall apply over the full specified V_{CC} range and case temperature range of -55°C to +125°C.
4/ Maximum junction temperature shall not be exceeded except for allowable short duration burn-in screening conditions in accordance with method 5004 of MIL-STD-883.

1.5 Radiation features.

Maximum total dose available (dose rate = 50 – 300 rads (Si)/s) ..... 100 krads(Si)

2. APPLICABLE DOCUMENTS

2.1 Government specification, standards, and handbooks. The following specification, standards, and handbooks form a part of this drawing to the extent specified herein. Unless otherwise specified, the issues of these documents are those cited in the solicitation or contract.

DEPARTMENT OF DEFENSE SPECIFICATION

MIL-PRF-38535 - Integrated Circuits, Manufacturing, General Specification for.

DEPARTMENT OF DEFENSE STANDARDS

MIL-STD-883 - Test Method Standard Microcircuits.
MIL-STD-1835 - Interface Standard Electronic Component Case Outlines.

DEPARTMENT OF DEFENSE HANDBOOKS

MIL-HDBK-103 - List of Standard Microcircuit Drawings.
MIL-HDBK-780 - Standard Microcircuit Drawings.

(Copies of these documents are available online at https://quicksearch.dla.mil/).

2.2 Non-Government publications. The following document(s) form a part of this document to the extent specified herein. Unless otherwise specified, the issues of these documents cited in the solicitation or contract.

JEDEC – SOLID STATE TECHNOLOGY ASSOCIATION (JEDEC)

JESD20 - Standard for Description of 54/74ACXXXXX and 54/74ACTXXXXX Advanced High-Speed CMOS Devices.

(Copies of these documents are available online at https://www.jedec.org/).

2.3 Order of precedence. In the event of a conflict between the text of this drawing and the references cited herein, the text of this drawing takes precedence. Nothing in this document, however, supersedes applicable laws and regulations unless a specific exemption has been obtained.

3. REQUIREMENTS

3.1 Item requirements. The individual item requirements for device classes Q and V shall be in accordance with MIL-PRF-38535 and as specified herein or as modified in the device manufacturer's Quality Management (QM) plan. The modification in the QM plan shall not affect the form, fit, or function as described herein. The individual item requirements for device class M shall be in accordance with MIL-PRF-38535, appendix A for non-JAN class level B devices and as specified herein.

3.2 Design, construction, and physical dimensions. The design, construction, and physical dimensions shall be as specified in MIL-PRF-38535 and herein for device classes Q and V or MIL-PRF-38535, appendix A and herein for device class M.

3.2.1 Case outlines. The case outlines shall be in accordance with 1.2.4 herein.

3.2.2 Terminal connections. The terminal connections shall be as specified on figure 1.

3.2.3 Truth table. The truth table shall be as specified on figure 2.

3.2.4 Logic diagram. The logic diagram shall be as specified on figure 3.

3.2.5 Switching waveforms and test circuit. The switching waveforms and test circuit shall be as specified on figure 4.

3.2.6 Radiation exposure circuit. The radiation exposure circuit shall be maintained by the manufacturer under document revision level control and shall be made available to the preparing and acquiring activity upon request.

3.3 Electrical performance characteristics and postirradiation parameter limits. Unless otherwise specified herein, the electrical performance characteristics and postirradiation parameter limits are as specified in table I and shall apply over the full case operating temperature range.

3.4 Electrical test requirements. The electrical test requirements shall be the subgroups specified in table II. The electrical tests for each subgroup are defined in table I.

3.5 Marking. The part shall be marked with the PIN listed in 1.2 herein. In addition, the manufacturer's PIN may also be marked. For packages where marking of the entire SMD PIN number is not feasible due to space limitations, the manufacturer has the option of not marking the "5962-" on the device. For RHA product using this option, the RHA designator shall still be marked. Marking for device classes Q and V shall be in accordance with MIL-PRF-38535. Marking for device class M shall be in accordance with MIL-PRF-38535, appendix A.

3.5.1 Certification/compliance mark. The certification mark for device classes Q and V shall be a "QML" or "Q" as required in MIL-PRF-38535. The compliance mark for device class M shall be a "C" as required in MIL-PRF-38535, appendix A.

3.6 Certificate of compliance. For device classes Q and V, a certificate of compliance shall be required from a QML-38535 listed manufacturer in order to supply to the requirements of this drawing (see 6.6.1 herein). For device class M, a certificate of compliance shall be required from a manufacturer in order to be listed as an approved source of supply in MIL-HDBK-103 (see 6.6.2 herein). The certificate of compliance submitted to DLA Land and Maritime-VA prior to listing as an approved source of supply for this drawing shall affirm that the manufacturer's product meets, for device classes Q and V, the requirements of MIL-PRF-38535 and herein or for device class M, the requirements of MIL-PRF-38535, appendix A and herein.

3.7 Certificate of conformance. A certificate of conformance as required for device classes Q and V in MIL-PRF-38535 or for device class M in MIL-PRF-38535, appendix A shall be provided with each lot of microcircuits delivered to this drawing.

3.8 Notification of change for device class M. For device class M, notification to DLA Land and Maritime-VA of change of product (see 6.2 herein) involving devices acquired to this drawing is required for any change that affects this drawing.

3.9 Verification and review for device class M. For device class M, DLA Land and Maritime, DLA Land and Maritime 's agent, and the acquiring activity retain the option to review the manufacturer's facility and applicable required documentation. Offshore documentation shall be made available onshore at the option of the reviewer.

3.10 Microcircuit group assignment for device class M. Device class M devices covered by this drawing shall be in microcircuit group number 38 (see MIL-PRF-38535, appendix A).

TABLE I. Electrical performance characteristics.

Test and MIL-STD-883 test method 1/	Symbol	Test conditions 2/ 3/ -55°C ≤ T_C ≤ +125°C +4.5 V ≤ V_{CC} ≤ +5.5 V unless otherwise specified	Device type and device class	V_{CC}	Group A subgroups	Limits 4/ Min	Limits 4/ Max	Unit
Positive input clamp voltage	V_{IC+} 5/	For input under test, I_{IN} = 1.0 mA	All V	0.0 V	1	0.4	1.5	V
Negative input clamp voltage	V_{IC-} 5/	For input under test, I_{IN} = -1.0 mA	All V	Open	1	-0.4	-1.5	V
High level output voltage 3006	V_{OH} 5/ 6/	V_{IN} = V_{IH} = 2.0 V or V_{IL} = 0.8 V I_{OH} = -50 μA	All All	4.5 V	1, 2, 3	4.4		V
				5.5 V		5.4		
		V_{IN} = V_{IH} = 2.0 V or V_{IL} = 0.8 V I_{OH} = -24 mA	All All	4.5 V	1, 2, 3	3.7		
			All All	5.5 V	1, 2, 3	4.7		
		V_{IN} = V_{IH} = 2.0 V or V_{IL} = 0.8 V I_{OH} = -50 mA	All All	5.5 V	1, 2, 3	3.85		
Low level output voltage 3007	V_{OL} 5/ 6/	V_{IN} = V_{IH} = 2.0 V or V_{IL} = 0.8 V I_{OL} = +50 μA	All All	4.5 V	1, 2, 3		0.1	V
			All All	5.5 V			0.1	
		V_{IN} = V_{IH} = 2.0 V or V_{IL} = 0.8 V I_{OL} = +24 mA	All All	4.5 V	1, 2, 3		0.5	
			All All	5.5 V	1, 2, 3		0.5	
		V_{IN} = V_{IH} = 2.0 V or V_{IL} = 0.8 V I_{OL} = +50 mA	All All	5.5 V	1, 2, 3		1.65	
High level input voltage	V_{IH} 7/		All All	4.5 V	1, 2, 3	2.0		V
Low level input voltage	V_{IL} 7/		All All	4.5 V	1, 2, 3		0.8	V
Input leakage current high 3010	I_{IH} 5/	V_{IN} = 5.5 V	All All	5.5 V	1, 2, 3		1.0	μA
Input leakage current low 3009	I_{IL} 5/	V_{IN} = 0.0 V	All All	5.5 V	1, 2, 3		-1.0	μA
Quiescent supply current delta, TTL input levels 3005	ΔI_{CC} 5/ 8/	For input under test V_{IN} = V_{CC} - 2.1 V For all other inputs V_{IN} = V_{CC} or GND	All All	5.5 V	1, 2, 3		1.6	mA
		M, D	All All		1		1.6	
		P, L, R					3.5	

See footnotes at end of table.

TABLE I. Electrical performance characteristics - Continued.

Test and MIL-STD-883 test method 1/	Symbol	Test conditions 2/ 3/ -55°C ≤ T_C ≤ +125°C +4.5 V ≤ V_{CC} ≤ +5.5 V unless otherwise specified	Device type and device class	V_{CC}	Group A subgroups	Limits 4/ Min	Limits 4/ Max	Unit
Quiescent supply current high 3005	I_{CCH} 5/	V_{IN} = V_{CC} or GND	All	5.5 V	1, 2, 3		80	µA
			All					
		M	All		1		100	
		D	All				1.0	mA
		P, L, R					3.5	
Quiescent supply current low 3005	I_{CCL} 5/	V_{IN} = V_{CC} or GND	All	5.5 V	1, 2, 3		80	µA
			All					
		M	All		1		100	
		D	All				1.0	mA
		P, L, R					3.5	
Input capacitance 3012	C_{IN}	See 4.4.1c T_C = +25°C	All	GND	4		8.0	pF
			All					
Power dissipation capacitance	C_{PD} 9/	See 4.4.1c T_C = +25°C, f = 1 MHz	All	5.0 V	4		50.0	pF
			All					
Functional tests 3014	5/ 10/	See 4.4.1b, V_{IN} = V_{IH} or V_{IL} Verify output V_{OUT}	All	4.5 V	7, 8	L	H	
			All					
		M, D, P, L, R	All		7	L	H	
			All					
			All	5.5 V	7, 8	L	H	
			All					
Propagation delay time, CPn to Qn, $\overline{Q}$n 3003	t_{PHL1} 5/ 11/	C_L = 50 pF R_L = 500Ω See figure 4	All	4.5 V	9	1.0	10.0	ns
			All					
			All		10, 11	1.0	12.0	
			All					
	t_{PLH1} 5/ 11/	C_L = 50 pF R_L = 500Ω See figure 4	All		9	1.0	11.0	
			All					
			All		10, 11	1.0	14.0	
			All					
Propagation delay time, $\overline{CD}$n or $\overline{SD}$n to Qn, $\overline{Q}$n 3003	t_{PHL2} 5/ 11/	C_L = 50 pF R_L = 500Ω See figure 4	All	4.5 V	9	1.0	10.8	ns
			All					
			All		10, 11	1.0	12.6	
			All					
	t_{PLH2} 5/ 11/	C_L = 50 pF R_L = 500Ω See figure 4	All		9	1.0	9.5	
			All					
			All		10, 11	1.0	11.5	
			All					

See footnotes on next sheet.

TABLE I. Electrical performance characteristics - Continued.

1/ For tests not listed in the referenced MIL-STD-883, (e.g. I_{CC}(O/V1), utilize the general test procedure under the conditions listed herein.

2/ Each input/output, as applicable, shall be tested at the specified temperature, for the specified limits, to the tests in table I herein. Output terminals not designated shall be high level logic, low level logic, or open, except as follows:

a. V_{IC} (pos) tests, the GND terminal can be open. T_C = +25°C.
b. V_{IC} (neg) tests, the V_{CC} terminal shall be open. T_C = +25°C.
c. All I_{CC} tests, the output terminal shall be open. When performing these tests, the current meter shall be placed in the circuit such that all current flows through the meter.

Additional detailed information on qualified devices (i.e. pin for pin conditions and testing sequence) is available from the qualifying activity (DLA Land and Maritime-VQC) upon request.

3/ RHA devices supplied to this drawing have been characterized through all levels M, D, P, L and R of irradiation. However, this device is only tested at the 'R' level. Pre and Post irradiation values are identical unless otherwise specified in table I. When performing post irradiation electrical measurements for any RHA level, T_A = +25°C.

4/ For negative and positive voltage and current values, the sign designates the potential difference in reference to GND and the direction of current flow, respectively; and the absolute value of the magnitude, not the sign, is relative to the minimum and maximum limits, as applicable, listed herein. All devices shall meet or exceed the limits specified in table I, as applicable, at 4.5 V $\leq V_{CC} \leq$ 5.5 V.

5/ RHA samples do not have to be tested at -55°C and +125°C prior to irradiation.

6/ The V_{OH} and V_{OL} tests shall be tested at V_{CC} = 4.5 V. The V_{OH} and V_{OL} tests are guaranteed, if not tested, for V_{CC} = 5.5 V. Limits shown apply to operation at V_{CC} = 5.0 V ±0.5 V. Transmission driving tests are performed at V_{CC} = 5.5 V with a 2 ms duration maximum.

7/ The V_{IH} and V_{IL} tests are not required if applied as forcing functions for V_{OH} and V_{OL} tests.

8/ This test may be performed either one input at a time (preferred method) or with all input pins simultaneously at $V_{IN} = V_{CC}$ -2.1 V (alternate method). Classes Q and V shall use the preferred method. When the test is performed using the alternate test method, the maximum limit is equal to the number of inputs at a high TTL input level times 1.6 mA; and the preferred method and limits are guaranteed.

9/ Power dissipation capacitance (C_{PD}) determines the no load dynamic power consumption, $P_D = (C_{PD}+C_L)(V_{CC} \times V_{CC})f + (I_{CC} \times V_{CC}) + (n \times d \times \Delta I_{CC} \times V_{CC})$. The dynamic current consumption, $I_S = (C_{PD}+C_L V_{CC} f + I_{CC} + n \times d \times \Delta I_{CC}$. For both P_D and I_S: n is the number of device inputs at TTL levels, f is the frequency of the input signal, d is the duty cycle of the input signal, and C_L is the external output load capacitance.

10/ Tests shall be performed in sequence, attributes data only. Functional tests shall include the truth table and other logic patterns used for fault detection. The test vectors used to verify the truth table shall, at a minimum, test all functions of each input and output. All possible input to output logic patterns per function shall be guaranteed, if not tested, to the truth table in figure 2 herein. Functional tests shall be performed in sequence as approved by the qualifying activity on qualified devices. H $\geq$ 2.5 V, L $\leq$ 2.5 V; high inputs = 2.4 V and low inputs = 0.4 V. The input voltage levels have the allowable tolerances in accordance with MIL-STD-883 already incorporated.

11/ AC limits at V_{CC} = 5.5 V are equal to the limits at V_{CC} = 4.5 V and guaranteed by testing at V_{CC} = 4.5 V. Minimum ac limits for V_{CC} = 5.5 V are 1.0 ns and guaranteed by guardbanding the V_{CC} = 4.5 V minimum limits to 1.5 ns. For propagation delay tests, all paths must be tested.

Device types	01		02	
Case outlines	E and F	2	E and F	2
Terminal number	Terminal symbol			
1	$\overline{CD}1$	NC	$\overline{SD}1$	NC
2	J1	$\overline{CD}1$	Q1	$\overline{CD}1$
3	$\overline{K}1$	J1	$\overline{Q}1$	J1
4	CP1	$\overline{K}1$	GND	$\overline{K}1$
5	$\overline{SD}1$	CP1	$\overline{Q}2$	CP1
6	Q1	NC	Q2	NC
7	$\overline{Q}1$	$\overline{SD}1$	$\overline{SD}2$	$\overline{SD}1$
8	GND	Q1	CP2	Q1
9	$\overline{Q}2$	$\overline{Q}1$	$\overline{K}2$	$\overline{Q}1$
10	Q2	GND	J2	GND
11	$\overline{SD}2$	NC	$\overline{CD}2$	NC
12	CP2	$\overline{Q}2$	V_{CC}	$\overline{Q}2$
13	$\overline{K}2$	Q2	$\overline{CD}1$	Q2
14	J2	$\overline{SD}2$	J1	$\overline{SD}2$
15	$\overline{CD}2$	CP2	$\overline{K}1$	CP2
16	V_{CC}	NC	CP1	NC
17	---	$\overline{K}2$	---	$\overline{K}2$
18	---	J2	---	J2
19	---	$\overline{CD}2$	---	$\overline{CD}2$
20	---	V_{CC}	---	V_{CC}

NC = No internal connection

Terminal descriptions	
Terminal symbol	Description
Jn (n = 1 to 2)	J data inputs
$\overline{K}$n (n = 1 to 2)	$\overline{K}$ data inputs (inverting)
CPn (n = 1 to 2)	Clock pulse inputs
$\overline{CD}$n (n = 1 to 2)	Clear inputs (active low)
$\overline{SD}$n (n = 1 to 2)	Set inputs (active low)
Qn (n = 1 to 2)	Data outputs
$\overline{Q}$n (n = 1 to 2)	Data outputs (inverting)

FIGURE 1. Terminal connections.

Inputs					Outputs	
$\overline{SD}$n	$\overline{CD}$n	CPn	Jn	$\overline{K}$n	Qn	$\overline{Q}$n
L	H	X	X	X	H	L
H	L	X	X	X	L	H
L	L	X	X	X	H 1/	H 1/
H	H	↑	L	L	L	H
H	H	↑	H	L	Toggle	
H	H	↑	L	H	Q0	$\overline{Q}$0
H	H	↑	H	H	H	L
H	H	L	X	X	Q0	$\overline{Q}$0

H = High voltage level
L = Low voltage level
X = Immaterial
↑ = Low-to-high clock transition
Q0 ($\overline{Q}$0) = Previous Qn ($\overline{Q}$n) before low-to-high transition of clock
1/ This configuration is nonstable. It will not persist when either set or clear return to their inactive (high) level.

FIGURE 2. Truth table.

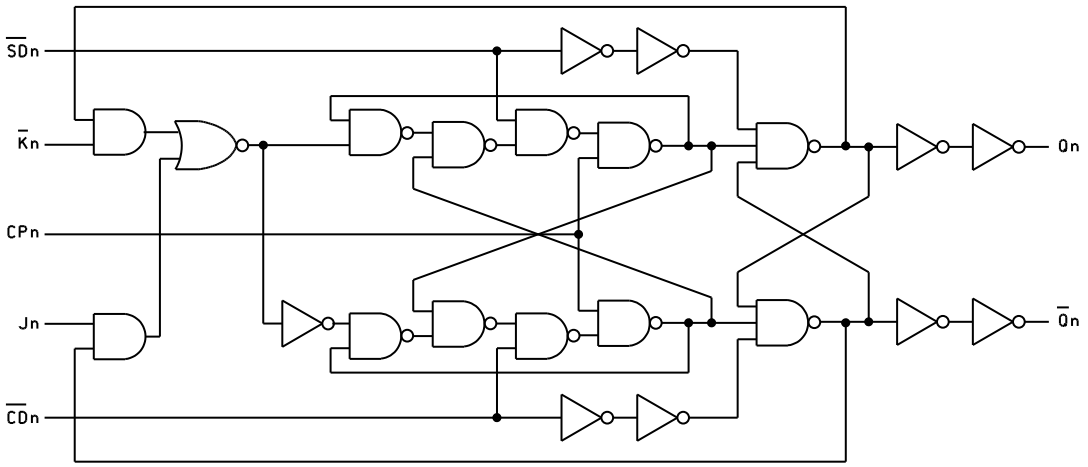

FIGURE 3. Logic diagram.

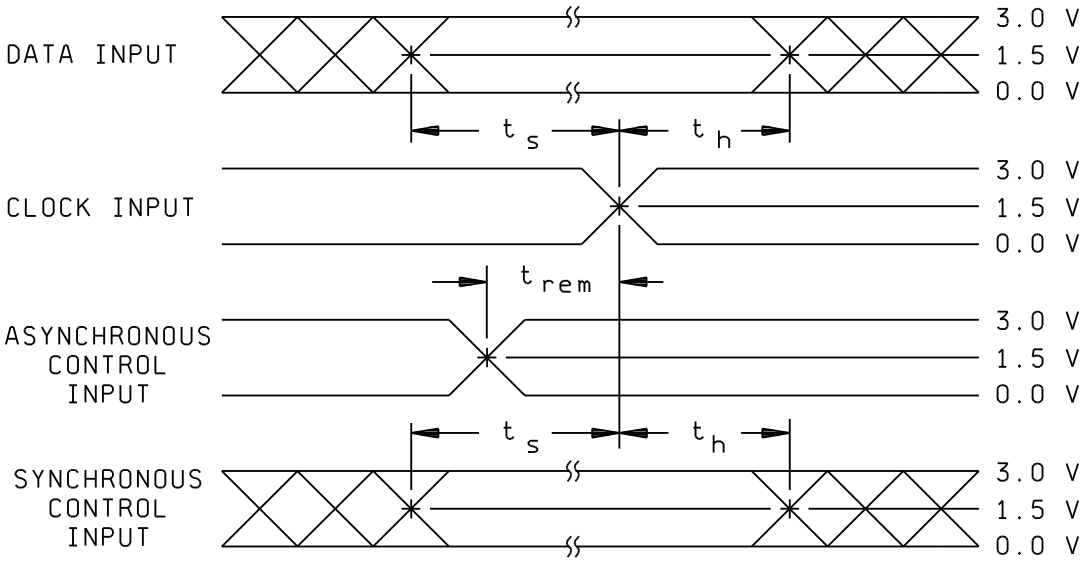

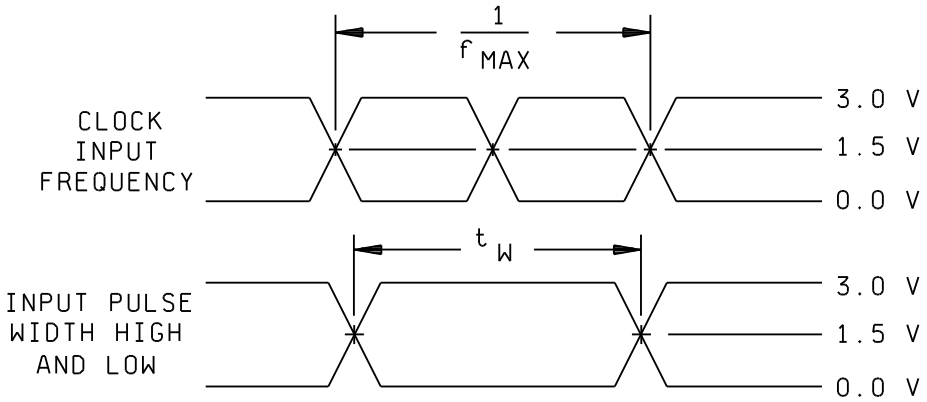

FIGURE 4. Switching waveforms and test circuit.

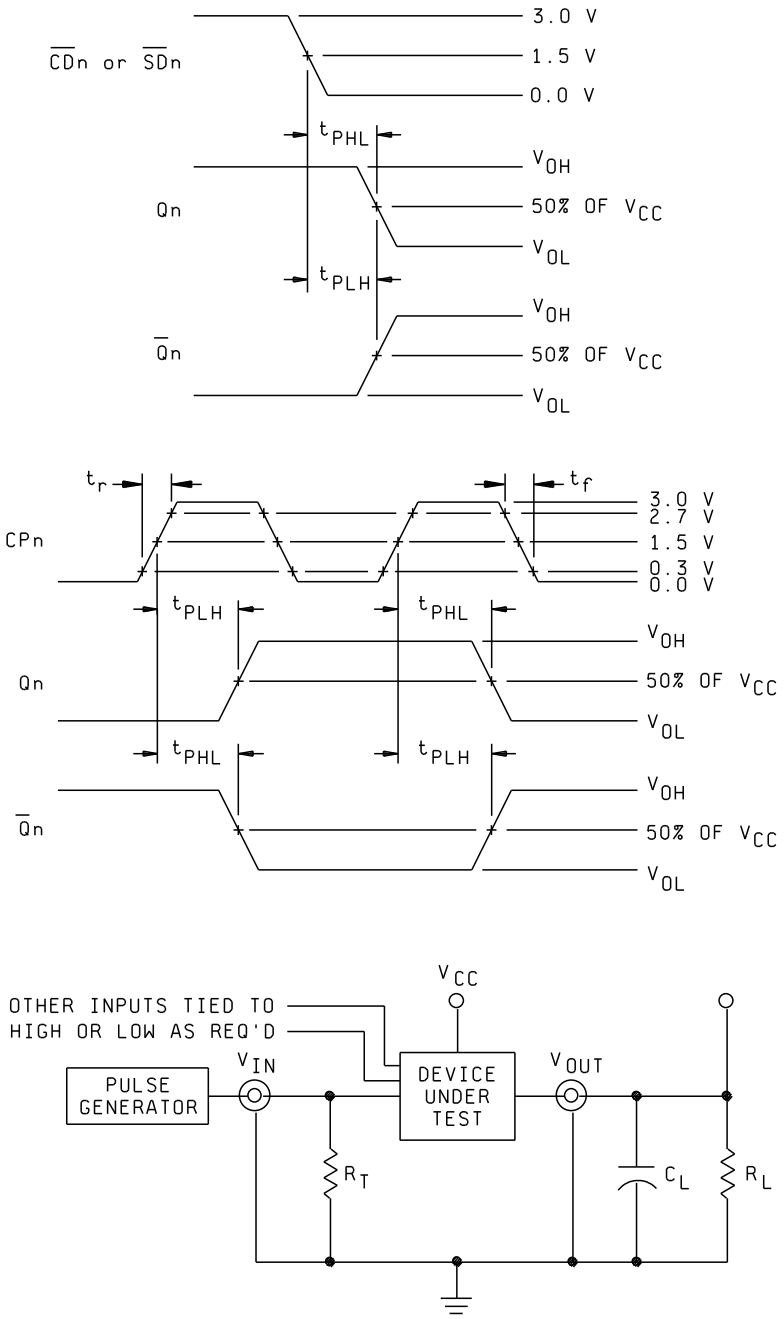

NOTES:

1. C_L = 50 pF minimum or equivalent (includes test jig and probe capacitance).
2. R_T = 50Ω or equivalent, R_L = 500Ω or equivalent.
3. Input signal from pulse generator: V_{IN} = 0.0 V to 3.0 V; PRR ≤ 10 MHz; t_r ≤ 3.0 ns; t_f ≤ 3.0 ns; t_r and t_f shall be measured from 0.3 V to 2.7 V, and from 2.7 V to 0.3 V, respectively; duty cycle = 50 percent.
4. Timing parameters shall be tested at a minimum input frequency of 1 MHz.
5. The outputs are measured one at a time with one transition per measurement.

FIGURE 4. Switching waveforms and test circuit - Continued.

4. VERIFICATION

4.1 Sampling and inspection. For device classes Q and V, sampling and inspection procedures shall be in accordance with MIL-PRF-38535 or as modified in the device manufacturer's Quality Management (QM) plan. The modification in the QM plan shall not affect the form, fit, or function as described herein. For device class M, sampling and inspection procedures shall be in accordance with MIL-PRF-38535, appendix A.

4.2 Screening. For device classes Q and V, screening shall be in accordance with MIL-PRF-38535, and shall be conducted on all devices prior to qualification and technology conformance inspection. For device class M, screening shall be in accordance with method 5004 of MIL-STD-883, and shall be conducted on all devices prior to quality conformance inspection.

4.2.1 Additional criteria for device class M.

a. Burn-in test, method 1015 of MIL-STD-883.

(1) Test condition A, B, C, or D. The test circuit shall be maintained by the manufacturer under document revision level control and shall be made available to the preparing or acquiring activity upon request. The test circuit shall specify the inputs, outputs, biases, and power dissipation, as applicable, in accordance with the intent specified in method 1015.

(2) T_A = +125°C, minimum.

b. Interim and final electrical test parameters shall be as specified in table II herein.

4.2.2 Additional criteria for device classes Q and V.

a. The burn-in test duration, test condition and test temperature, or approved alternatives shall be as specified in the device manufacturer's QM plan in accordance with MIL-PRF-38535. The burn-in test circuit shall be maintained under document revision level control of the device manufacturer's Technology Review Board (TRB) in accordance with MIL-PRF-38535 and shall be made available to the acquiring or preparing activity upon request. The test circuit shall specify the inputs, outputs, biases, and power dissipation, as applicable, in accordance with the intent specified in method 1015 of MIL-STD-883.

b. Interim and final electrical test parameters shall be as specified in table II herein.

c. Additional screening for device class V beyond the requirements of device class Q shall be as specified in MIL-PRF-38535, appendix B.

4.3 Qualification inspection for device classes Q and V. Qualification inspection for device classes Q and V shall be in accordance with MIL-PRF-38535. Inspections to be performed shall be those specified in MIL-PRF-38535 and herein for groups A, B, C, D, and E inspections (see 4.4.1 through 4.4.4).

4.4 Conformance inspection. Technology conformance inspection for classes Q and V shall be in accordance with MIL-PRF-38535 including groups A, B, C, D, and E inspections and as specified. Quality conformance inspection for device class M shall be in accordance with MIL-PRF-38535, appendix A and as specified herein. Inspections to be performed for device class M shall be those specified in method 5005 of MIL-STD-883 and herein for groups A, B, C, D, and E inspections (see 4.4.1 through 4.4.4).

4.4.1 Group A inspection.

a. Tests shall be as specified in table II herein.

b. For device class M, subgroups 7 and 8 tests shall be sufficient to verify the truth table in figure 2 herein. The test vectors used to verify the truth table shall, at a minimum, test all functions of each input and output. All possible input to output logic patterns per function shall be guaranteed, if not tested, to the truth table in figure 2 herein. For device classes Q and V, subgroups 7 and 8 shall include verifying the functionality of the device.

c. C_{IN} and C_{PD} shall be measured only for initial qualification and after process or design changes which may affect capacitance. C_{IN} shall be measured between the designated terminal and GND at a frequency of 1 MHz. For C_{IN} and C_{PD}, test all applicable pins on five devices with zero failures.

TABLE II. Electrical test requirements.

Test requirements	Subgroups (in accordance with MIL-STD-883, method 5005, table I)	Subgroups (in accordance with MIL-PRF-38535, table III)	
	Device class M	Device class Q	Device class V
Interim electrical parameters (see 4.2)	- - -	- - -	1
Final electrical parameters (see 4.2)	1, 2, 3, 7, 8, 9 1/	1/ 1, 2, 3, 7, 8, 9, 10, 11	2/ 3/ 1, 2, 3, 7, 8, 9, 10, 11
Group A test requirements (see 4.4)	1, 2, 3, 4, 7, 8, 9, 10, 11	1, 2, 3, 4, 7, 8, 9, 10, 11	1, 2, 3, 4, 7, 8, 9, 10, 11
Group C end-point electrical parameters (see 4.4)	1, 2, 3	1, 2, 3	3/ 1, 2, 3, 7,8, 9, 10, 11
Group D end-point electrical parameters (see 4.4)	1, 2, 3	1, 2, 3	1, 2, 3
Group E end-point electrical parameters (see 4.4)	1, 7, 9	1, 7, 9	1, 7, 9

1/ PDA applies to subgroup 1.
2/ PDA applies to subgroups 1, 7 and deltas.
3/ Delta limits as specified in table III shall be required where specified and the delta limits shall be completed with reference to the zero hour electrical parameters.

TABLE III. Burn-in and operating life test, delta parameters (+25°C). 1/

Parameter	Symbol	Delta Limits
Quiescent current	I_{CC}	±300 nA
Supply current delta	ΔI_{CC}	±0.4 mA
Input current low level	I_{IL}	±20 nA
Input current high level	I_{IH}	±20 nA
Output voltage low level (I_{OL} = +24 mA, V_{CC} = 4.5 V)	V_{OL}	±0.04 V
Output voltage high level (I_{OH} = -24 mA, V_{CC} = 4.5 V)	V_{OH}	±0.20 V

1/ This table is a representation of what vendor CAGE F8859 has experienced and is guaranteed and not meant to be construed as a quality assurance requirement for any other vendor.

4.4.2 Group C inspection. The group C inspection end-point electrical parameters shall be as specified in table II herein.

4.4.2.1 Additional criteria for device class M. Steady-state life test conditions, method 1005 of MIL-STD-883:

a. Test condition A, B, C, or D. The test circuit shall be maintained by the manufacturer under document revision level control and shall be made available to the preparing or acquiring activity upon request. The test circuit shall specify the inputs, outputs, biases, and power dissipation, as applicable, in accordance with the intent specified in method 1005 of MIL-STD-883.

b. T_A = +125°C, minimum.

c. Test duration: 1,000 hours, except as permitted by method 1005 of MIL-STD-883.

4.4.2.2 Additional criteria for device classes Q and V. The steady-state life test duration, test condition and test temperature, or approved alternatives shall be as specified in the device manufacturer's QM plan in accordance with MIL-PRF-38535. The test circuit shall be maintained under document revision level control by the device manufacturer's TRB in accordance with MIL-PRF-38535 and shall be made available to the acquiring or preparing activity upon request. The test circuit shall specify the inputs, outputs, biases, and power dissipation, as applicable, in accordance with the intent specified in method 1005 of MIL-STD-883.

4.4.3 Group D inspection. The group D inspection end-point electrical parameters shall be as specified in table II herein.

4.4.4 Group E inspection. Group E inspection is required only for parts intended to be marked as radiation hardness assured (see 3.5 herein).

a. End-point electrical parameters shall be as specified in table II herein.

b. For device classes Q and V, the devices or test vehicle shall be subjected to radiation hardness assured tests as specified in MIL-PRF-38535 for the RHA level being tested. For device class M, the devices shall be subjected to radiation hardness assured tests as specified in MIL-PRF-38535, appendix A for the RHA level being tested. All device classes must meet the postirradiation end-point electrical parameter limits as defined in table I at T_A = +25°C ±5°C, after exposure, to the subgroups specified in table II herein.

4.4.4.1 Total dose irradiation testing. Total dose irradiation testing shall be performed in accordance with MIL-STD-883, method 1019, condition A and as specified herein:

Prior to and during total dose irradiation characterization and testing, the devices for characterization shall be biased so that 50 percent are at inputs high and 50 percent are at inputs low, and the devices for testing shall be biased to the worst case condition established during characterization. Devices shall be biased as follows:

1. Inputs tested high, V_{CC} = 5.5 V dc +5%, R_{CC} = 10Ω +20%, V_{IN} = 5.0 V dc +5%, R_{IN} = 1 kΩ +20%, and all outputs are open.
2. Inputs tested low, V_{CC} = 5.5 V dc +5%, R_{CC} = 10Ω +20%, V_{IN} = 0.0 V dc, R_{IN} = 1 kΩ +20%, and all outputs are open.

4.4.4.1.1 Accelerated annealing testing. Accelerated annealing testing shall be performed on all devices requiring a RHA level greater than 5k rads (Si). The post-anneal end-point electrical parameter limits shall be as specified in table IA herein and shall be the pre-irradiation end-point electrical parameter limits at 25°C ±5°C. Testing shall be performed at initial qualification and after any design or process changes which may affect the RHA response of the device

4.5 Methods of inspection. Methods of inspection shall be specified as follows:

4.5.1 Voltage and current. Unless otherwise specified, all voltages given are referenced to the microcircuit GND terminal. Currents given are conventional current and positive when flowing into the referenced terminal.

5. PACKAGING

5.1 Packaging requirements. The requirements for packaging shall be in accordance with MIL-PRF-38535 for device classes Q and V or MIL-PRF-38535, appendix A for device class M.

6. NOTES

6.1 Intended use. Microcircuits conforming to this drawing are intended for use for Government microcircuit applications (original equipment), design applications, and logistics purposes.

6.1.1 Replaceability. Microcircuits covered by this drawing will replace the same generic device covered by a contractor-prepared specification or drawing.

6.2 Configuration control of SMD's. All proposed changes to existing SMD's will be coordinated with the users of record for the individual documents. This coordination will be accomplished using DD Form 1692, Engineering Change Proposal.

6.3 Record of users. Military and industrial users should inform DLA Land and Maritime when a system application requires configuration control and which SMD's are applicable to that system. DLA Land and Maritime will maintain a record of users and this list will be used for coordination and distribution of changes to the drawings. Users of drawings covering microelectronic devices (FSC 5962) should contact DLA Land and Maritime-VA, telephone (614) 692-8108.

6.4 Comments. Comments on this drawing should be directed to DLA Land and Maritime-VA, Columbus, Ohio 43218-3990, or telephone (614) 692-0591.

6.5 Abbreviations, symbols, and definitions. The abbreviations, symbols, and definitions used herein are defined in MIL-PRF-38535 and MIL-HDBK-1331.

6.6 Sources of supply.

6.6.1 Sources of supply for device classes Q and V. Sources of supply for device classes Q and V are listed in MIL-HDBK-103 and QML-38535. The vendors listed in MIL-HDBK-103 and QML-38535 have submitted a certificate of compliance (see 3.6 herein) to DLA Land and Maritime-VA and have agreed to this drawing.

6.6.2 Approved sources of supply for device class M. Approved sources of supply for class M are listed in MIL-HDBK-103. The vendors listed in MIL-HDBK-103 have agreed to this drawing and a certificate of compliance (see 3.6 herein) has been submitted to and accepted by DLA Land and Maritime-VA.

STANDARD MICROCIRCUIT DRAWING BULLETIN

DATE: 21-02-05

Approved sources of supply for SMD 5962-88534 are listed below for immediate acquisition information only and shall be added to MIL-HDBK-103 and QML-38535 during the next revision. MIL-HDBK-103 and QML-38535 will be revised to include the addition or deletion of sources. The vendors listed below have agreed to this drawing and a certificate of compliance has been submitted to and accepted by DLA Land and Maritime-VA. This information bulletin is superseded by the next dated revision of MIL-HDBK-103 and QML-38535. DLA Land and Maritime maintains an online database of all current sources of supply at https://landandmaritimeapps.dla.mil/programs/smcr/.

Standard microcircuit drawing PIN 1/	Vendor CAGE number	Vendor similar PIN 2/
5962-8853401EA	0C7V7	54ACT109DMQB
	0C7C7	EV54ACT109DMQB
	3V146	54ACT109/QEA
5962-8853401FA	0C7V7	54ACT109FMQB
	0C7V7	EV54ACT109FMQB
	3V146	54ACT109/QFA
5962-88534012A	0C7V7	54ACT109LMQB
	0C7V7	EV54ACT109LMQB
	3V146	54ACT109/Q2A
5962-8853401XA	3/	54ACT109K02Q
5962-8853401XC	3/	54ACT109K01Q
5962R8853401EA	3/	54ACT109DMQB-RH
5962R8853401FA	3/	54ACT109FMQB-RH
5962R88534012A	3/	54ACT109LMQB-RH
5962-8853401VXA	3/	54ACT109K02V
5962-8853401VXC	3/	54ACT109K01V
5962R8853401VEA	3/	54ACT109JRQMLV
	3V146	54ACT109/VEA-R
5962R8853401VFA	3/	54ACT109WRQMLV
	3V146	54ACT109/VFA-R
5962R8853401V2A	3/	54ACT109ERQMLV
	3V146	54ACT109/V2A-R
5962-8853402EA	3V146	54ACT11109/BEA
5962-8853402FA	3V146	54ACT11109/BFA
5962-88534022A	3V146	54ACT11109/B2A

1/ The lead finish shown for each PIN representing a hermetic package is the most readily available from the manufacturer listed for that part. If the desired lead finish is not listed contact the vendor to determine its availability.

2/ Caution. Do not use this number for item acquisition. Items acquired to this number may not satisfy the performance requirements of this drawing.

3/ Not available from an approved source of supply.

Vendor CAGE number	Vendor name and address
0C7V7	Teledyne e2v, Inc. 765 Sycamore Drive Milpitas, CA 95035
3V146	Rochester Electronics, LLC 16 Malcolm Hoyt Drive Newburyport, MA 01950

The information contained herein is disseminated for convenience only and the Government assumes no liability whatsoever for any inaccuracies in the information bulletin.